HIGH EFFICIENCY CONDENSING COMBINATION BOILER

Saunier Duval

Instructions for use
Installation and servicing

ISOTWIN CONDENS

ISOTWIN CONDENS F 35 E

GUARANTEE REGISTRATION

Thank you for installing a new Saunier Duval appliance in your home.
Saunier Duval appliances are manufactured to the very highest standard so we are pleased to offer our customers a Comprehensive Guarantee.
This product is guaranteed for 24 months from the date of installation or 30 months from the date of manufacture, whichever is the shorter, for parts. In addition, this product is guaranteed for 12 months from the date of installation or 18 months from the date of manufacture, whichever is the shorter, for the labour.
The second year of the parts guarantee, from the beginning of the 13th month onwards after installation or manufacture, is conditional upon the boiler having been serviced by a CORGI registered gas installer,
in accordance with the manufacturer's recommendations. We strongly recommend regular servicing of your gas appliance, but where the condition is not met, any chargeable spare parts or components issued within the applicable guarantee period still benefit from a 12 month warranty from the date of issue by the manufacturer.

We recommend you complete and return as soon as possible your guarantee registration card.

If your guarantee registration card is missing, you can obtain a copy or record your registration by telephoning the Saunier Duval Customer Service number below.

For customer service call:
01773 525 914
Technical helpline: 01773 828400

For General and Sales enquiries:
Tel. 0870 6064351

To register your Saunier Duval appliance call:
0800 073 2144

Please complete the Benchmark Log Book at the end of this manual, if the appliance fails to operate then the condition should be reported immediately to our service organisation Saunier Duval Service 01773 525 914.

DO NOT REMOVE the appliance from the system until the engineer has confirmed and signed the report allowing the return of the appliance to the merchant.
The merchant will **NOT** accept any returns unless supported by Saunier Duval Service the engineer's signed report.

Saunier Duval

spares & parts online
IBASIS.CO.UK

Saunier Duval

Index

1 General points 2

2 Documents 2

3 Safety 2

3.1 Gas Leak or Fault 2

3.2 Safety regulations and recommendations 2

4 Guarantee / Responsibility 3

5 Appliance use 4

6 Servicing 4

7 Recycling 4

8 Appliance use 6

8.1 Control panel 6

8.2 Commissioning and lighting 6

8.3 Temperature adjustment 7

9 Turn the boiler off 7

10 Fault finding 7

11 Frost protection 8

11.1 Boiler frost protection 8

11.2 Installation frost protection 8

12 Maintenance/After Sales Service 8

1 General points

ISOTWIN CONDENS F 35 E boiler is an appliance that uses condensing technology, which recovers heat present in waste gas.
Thanks to this operating principle, the boiler consumes less energy and decreases NOx and CO2 emissions.

ISOTWIN CONDENS F 35 E boiler has a double use (heating + instantaneous hot water).

This appliance of the room-sealed type is equipped with a flue exhaust and air intake for combustion products called the flue system. This flue system connection principle offers the possibility to install the appliance in any room and with no specific ventilation requirements.

The installation and the commissioning of the appliance has to be carried out by a skilled professional who is responsible for the compliance of the installation and the commissioning according to current regulations.

You also have to call on a skilled professional for the maintenance and the repairing of the appliance as well as for any gas adjustment.

Saunier Duval has specially designed different accessories for your appliance depending on your installation.

If you want to have a detailed list, please contact your supplier or visit our website www.saunier-duval.co.uk.

2 Documents

- Please keep this manual as well as any documents enclosed with it safe for future reference.

We accept no liability in case of damage due to the non-compliance of the instructions of the present manual.

3 Safety

3.1 Gas Leak or Fault

- Do not switch on nor switch off the light.
- Do not activate the electrical switch.
- Do not use the phone in this risky area.
- Do not light up a flame (for example, a lighter or a match).
- Do not smoke.
- Turn off the gas emergency control valve immediatly.
- Open all windows and doors to ventilate the area.
- Warn any person in the house.
- Inform the Gas Utility company or a skilled professional.

3.2 Safety regulations and recommendations

Please observe the following safety regulations and recommendations:

- Do not use any aerosols, solvents, abrasive cleaner, detergents with chlorine, paint, glue, etc. near the appliance. Under unfavourable conditions, these substances can be very corrosive even for the flue.

- Do not use or store any explosive material or easily flammable (for example, petrol, paint, etc.) in the room where the appliance is situated.
- Never switch off the safety devices and do not try to handle these devices as this could lead to a malfunction.
- Do not change:
  - The appliance,
  - The appliance environment,
  - Water, air, gas and electric supply,
  - Flue system.
- Never carry out by yourself maintenance or repairing operations on the appliance.
- In case of a water leakage, immediately close the cold water inlet of the appliance and call a skilled professional to repair the leakage.
- Do not break sealed mechanisms.
- Do not modify the technical conditions close to the appliance, as these are very important as far as the appliance safety is concerned.
  For example: the minimum clearances of the external sides.

Warning!
A heating safety valve with a discharge pipe and a domestic hot water pressure relief valve with a discharge pipe are fitted to this appliance. The valves must not be touched except by a skilled professional.

- If the valves discharges at any time, switch the appliance off and isolate it from the electrical supply.

Warning!
We advise you to be very careful when adjusting hot water temperature: water can be very hot when releasing from the draw off tap.

4 Guarantee / Responsibility

Your appliance is guaranteed for a period of 24 months from the date of installation or 30 months from the date of manufacture whichever is the shorter and covers manufacturing defects only.

We, Saunier Duval, undertake to repair or replace parts free of charge which are recognised by us to be of faulty manufacture - if necessary after return to our factory for examination - on condition that:

- The appliance was installed by a qualifled gas installer in accordance with installation instructions, and all the relevant codes of practice, standards and legislation in force.
- The appliance has been used for normal domestic purposes and in accordance with the manufacturer's operating and maintenance instructions.
- The appliance has not been serviced, maintained, repaired dismantled or tampered with during the guarantee period, by anyone other than a competent person.
- The repair or replacement of parts during the guarantee period does not have the effect of extending the period.

This guarantee does not cover:

- Any defects or damage resulting from incorrect or poor installation, inadequate servicing, or maladjustment of the gas or water used.
- Any defects in the system to which the appliance is connected.

- Any deterioration or maladjustment following changes in the nature or pressure of the gas or the water used, or a change in the characteristics of the electrical supply voltage.

Notification of any fault should be made to the appliance installer. No repairs should be undertaken upon the appliance, intending it to be covered by the product guarantee without prior authorisation from Saunier Duval.

IMPORTANT: The appliance serial number must be quoted on all correspondence/ contact made with Saunier Duval.

This guarantee is in addition to your statutory and other legal rights, which will not be excluded or diminished by the return of the guarantee registration card.

5 Appliance use

Saunier Duval's appliances are manufactured according to the latest technical evolutions and current safety regulations.

This appliance is used to produce hot water using gas. Any other use is considered as inappropriate and is forbidden.

The manufacturer shall not be responsible for any damage caused by another use. In that case the user shall be the responsible.

6 Servicing

- Clean the case of the appliance with wet soapy cloth.
- Do not use any abrasive cleaning product as they could damage the housing or plastic parts.

7 Recycling

The appliance comprises many recyclable parts. The packaging, the appliance and the content of the package shall not be thrown together with domestic waste but eliminated according to the current regulations.

spares & parts online IBASIS.CO.UK

8 Appliance use

8.1 Control panel

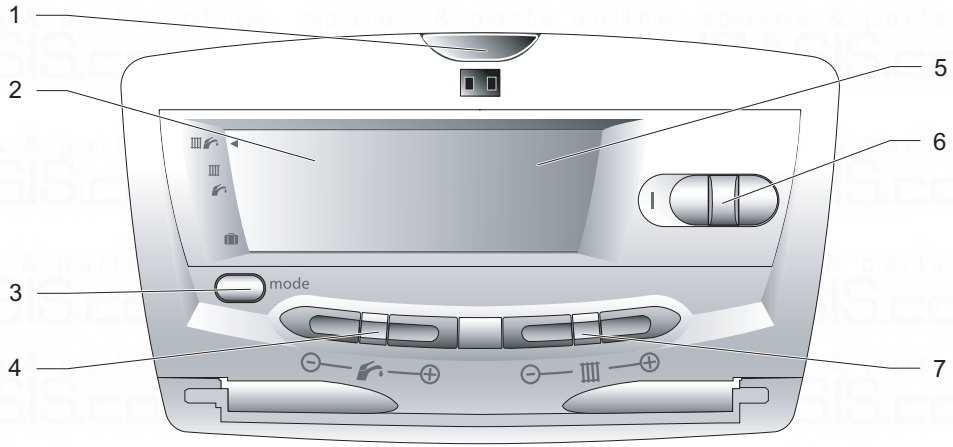

Legend

1 **Operating indicator**
2 **Display of the available pressure in the heating circuit**
3 **Operating mode selection**
4 **DHW temperature adjustment**
5 **Display of the measured temperature in the heating circuit**
6 **On/off switch**
7 **Heating temperature adjustment**

8.2 Commissioning and lighting

- Make sure that:
- the boiler is connected to the electrical supply.
- the gas service cock is open.
- Push the switch (6) until the “I” symbol appears.
  The operating indicator on the control panel turns on: the boiler is ready to run.
- Push “MODE” to modify the operating mode of the boiler. The ◄ symbol is then situated in front of the selected mode:

	Central heating and domestic hot water
	Central heating only
	Domestic hot water only
	Appliance frost protection

8.3 Temperature adjustment

8.3.1 Domestic hot water temperature adjustment

The domestic hot water must be set at max 63°C.

- Push + or – on the side to adjust the max temperature.
  The ECO symbol remains until 49°C.

8.3.2 Heating temperature adjustment

- Push + or – on the side to change water temperature between 22°C and the maximum value allowed by your installer.

Observation:
A quick push on +/- or / side displays the temperature value previously selected

9 Turn the boiler off

- Push the switch (6) until the “O” symbol appears.
  The appliance is no longer supplied with electric power.

We advise you to turn off the appliance gas supply if you leave home for a long period.

10 Fault finding

If there is a fault, then a fault symbol displays and the operating indicator on the control panel flashes red.

Warning !
Never try to service or repair the appliance by yourself and only start the appliance once a skilled professional repaired the fault.

Symbol and fault code	Cause	Corrective action
The operating indicator is OFF.	Power failure	Check the mains power supply is on and that the appliance is switched on at the spur or socket. The appliance starts automatically once the power supply is on. If the fault persists, please contact a skilled professional.
code F1, F4	Ignition fault	Deactivate the boiler Wait 5 seconds and then start the boiler again. If the fault continues, please contact a skilled professional.
code F2, F3	Air flow failure	
code F5	Overheating fault	Please contact a skilled professionnal
	Insufficient water pressure in the system	Open the blue tap situated under the boiler until you obtain a pressure between 1 and 2 bars on the indicator. If you have to fill it this might be caused by a leakage in your appliance. In this case, contact a skilled professional to check the boiler and system.
	Other defects	Please contact a skilled professionnal

11 Frost protection

11.1 Boiler frost protection

In case of frost risk, do as follows:

- Make sure the boiler is supplied with electrical power and gas.
- Select the operating mode on the control panel.

The frost protection system operates the boiler as soon as the temperature in the heating circuit is under 4°C. The boiler stops as soon as the water temperature in the heating circuit reaches 16°C.

11.2 Installation frost protection

- If you leave home for a few days, select the minimum heating temperature on the control panel of the boiler and just decrease the setpoint temperature on your room thermostat.
- If you leave home for a long period, see chapter “Draining of the appliance” in the installation manual.

12 Maintenance/After Sales Service

Please note that an incorrect servicing can affect the safety of the appliance and can lead to injury.

To ensure the continued efficient and safe operation of the appliance it is recommended that it is checked and serviced as necessary at regular intervals. The frequency of servicing will depend upon the particular installation conditions and usage, refer to guarantee registration.

If this appliance is installed in a rented property there is a duty of care imposed on the owner of the property by the current issue of the Gas Safety (Installation and Use) Regulations, Section 35. Servicing/maintenance should be carried out by a competent person in accordance with the rules in force in the countries of destination. To obtain service, please call your installer or Saunier Duval service.

Index

1 Comments on the instructions 11

2 Appliance description 11
2.1 Data label 11
2.2 Mandatory WARNING for EEC countries 11
2.3 Block diagram 12

3 Appliance location 13

4 Safety instructions and regulations 14
4.1 Safety instructions 14
4.2 Regulations 15

5 Appliance installation 16
5.1 Recommendations before mounting 16
5.2 Dimensions 18
5.3 List of delivered equipment 18
5.4 Fixing to the wall 18
5.5 Gas and water connection 20
5.6 Connection to the condensate trap 24
5.7 Flue connection 24
5.8 Electrical connection 27
5.9 Wiring diagram 28

6 Commissioning 30

7 Specific adjustments 30
7.1 Heating circuit adjustment 30
7.2 Access to the boilers technical data (for professional and After Sales Service use only) 32

8 Draining of the appliance 34
8.1 Heating circuit 34
8.2 Domestic Hot Water circuit 34

Installation and servicing instructions strictly reserved for qualified gas installers

Saunier Duval

9 Gas conversion 34
9.1 Maximum rate 34
9.2 Minimum rate 35
9.3 Reactivation 35

10 Fault finding 36

11 Control / Commissioning 38

12 User information 38

13 Spare parts 38

14 Maintenance 39
14.1 Casing 39
14.2 Hydraulic block 40
14.3 Heating Return Filter 41
14.4 Condensate trap 41
14.5 Combustion block 42

15 Remplacement of parts 44
15.1 Hydraulic block 46
15.2 Combustion block 48
15.3 DHW storage vessel / Expansion vessel 50
15.4 Condensate trap 52
15.5 Control panel 52

16 Technical data 54

1 Comments on the instructions

- Please give all of the instructions to the user. The user shall keep them for future reference.

We accept no liability in case of damage due to the non-compliance of the instruction manual.

2 Appliance description

2.1 Data label

The data label certifies the origin where the product was manufactured and the country for which it is intended.
Warning! The appliance shall only be used with the gas types indicated on the data label.

2.2 Mandatory WARNING for EEC countries

This appliance is designed, approved and inspected to meet the requirements of the intended market. The data label indicates where the product was manufactured and the country for which it is intended.

This appliance meets the requirements of Statutory Instrument, No. 3083 The Appliance (Efficiency) Regulations, and therefore is deemed to meet the requirements of Directive 92/42/EEC on the efficiency requirements for new hot water appliances fired with liquid or gaseous fuels.

Type test for purposes of Regulation 5 certified by: Notified body 0063. Product/ production certified by: Notified body 0086.

The CE mark on this appliance shows compliance with:

- Directive 90/396/EEC on the approximation of the laws of the Member States relating to appliances burning gaseous fuels.
- Directive 73/23/EEC on the harmonisation of the Laws of the Member States relating to electrical equipment designed for use within certain voltage limits.
- Directive 89/336/EEC on the approximation of the Laws of the Member States relating to electromagnetic compatibility.

IMPORTANT. With regards to the Manual Handling Operations, 1992 Regulations, the following lift operations are recommended as the appliance weight exceeds a one-man lift.

- Clear the route before attempting the lift.
- Ensure safe lifting techniques are used - keep back straight - bend using legs.
- Keep load as close to body as possible.
- Do not twist - reposition feet instead.
- If two persons performing lift, ensure co-ordinated movements during lift.
- Always use assistance if required.

Manufacturer's instructions must not be taken as overriding statutory requirements. Reference in these instructions to British standards and statutory regulations/ requirements apply only to the United Kingdom. For Ireland the current edition of I.S.813 «Domestic Gas Installations» must be used.

This appliance certificated to the current issue of EN 483: 2000 for performance and safety. It is important that no alteration is made to the appliance, without permission, in writing, from Saunier Duval. Any alteration that is not approved by Saunier Duval could invalidate the warranty and could also infringe the current issue of the Statutory Requirements.

2.3 Block diagram

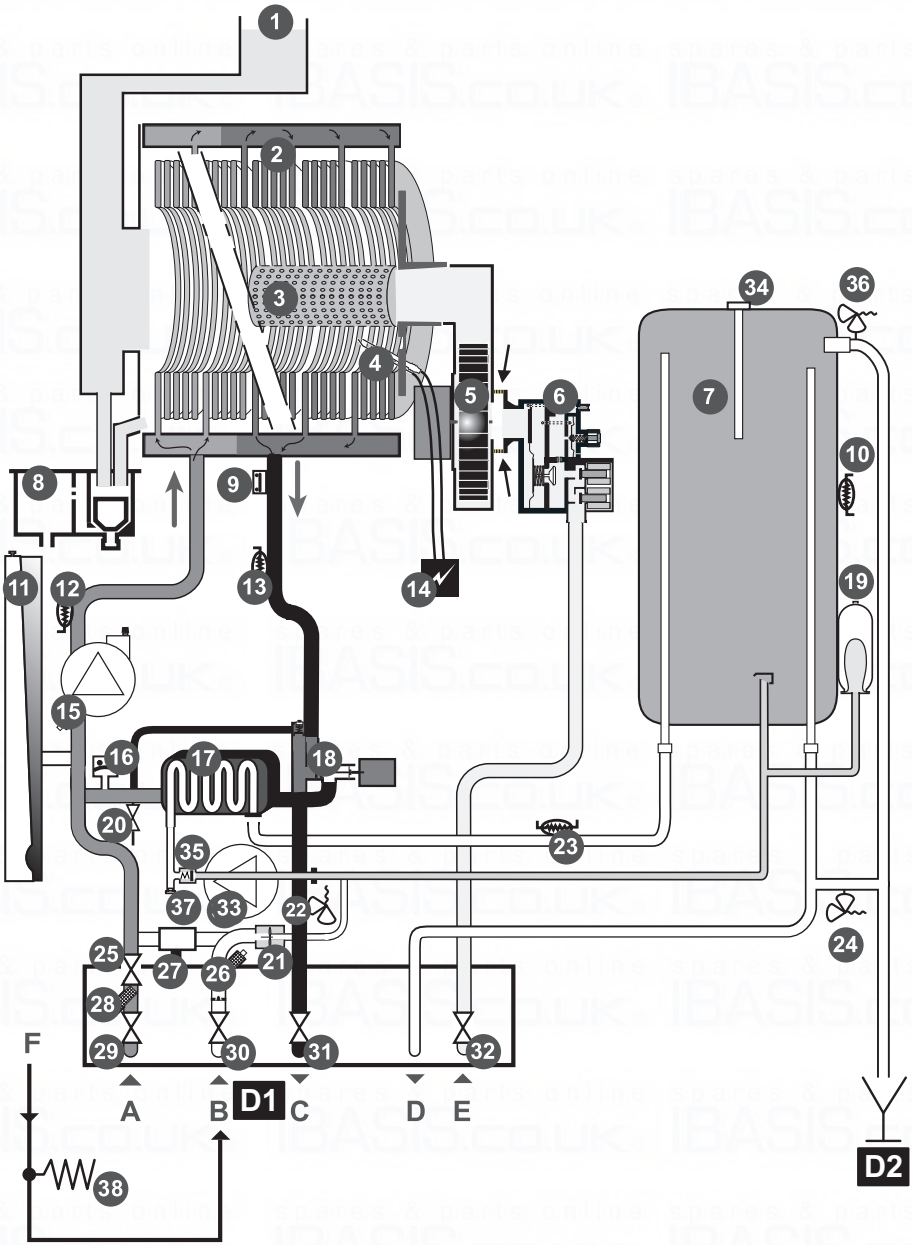

Legend

1 Flue outlet
2 Main heat exchanger
3 Burner
4 Ignition and control electrode
5 Fan
6 Gas control valve
7 DHW storage vessel
8 Condensate drain
9 Overheat safety thermostat
10 Temperature sensor for DHW storage vessel
11 Expansion vessel
12 Heating return thermistor
13 Heating flow thermistor
14 Ignition module
15 Heating Pump
16 Water pressure sensor
17 Domestic plate to plate heat exchanger
18 Three way valve
19 Domestic expansion vessel
20 Drain cock
21 Flow switch
22 Heating discharge safety valve
23 DHW temperature sensor
24 DHW discharge safety valve
25 Heating isolating valve
26 Filter on cold water inlet
27 Filling system
28 Filter on heating circuit
29 Heating isolating valve
30 Domestic cold water isolating valve
31 Heating isolating valve
32 Gas isolating valve
33 DHW pump
34 Storage anode protection
35 Non return valve
36 Temperature / pressure relief valve
37 Tapping (plug connection) for the recirculation loop
38 Pressure reducing valve and check valve

A Heating return
B Cold water inlet
C Heating flow
D Domestic hot water outlet
D1 Discharge from HTG safety valves
D2 Discharge from temp / press and expansion valve (to tundish)
E Gas
F Cold water supply

3 Appliance location

- This appliance is not suitable for outdoor installation.
- This appliance may be installed in any room, although particular attention is drawn to the installation of an appliance in a room containing a bath or shower where reference must be made to the relevant requirements. In GB this is the current I.E.E. WIRING REGULATIONS and BUILDING REGULATIONS.
- In IE reference should be made to the current edition of I.S.813 «Domestic Gas Installations» and the current ETCI rules.
- Make sure you keep an appropriate distance between the sides of the appliance to ensure total accessibility for servicing.
- The appliance must be mounted on a flat wall, which is sufficiently robust to take its weight.
- The appliance is room sealed, so when it is installed in a room or space, a permanent air vent is not required.
- Do not install the appliance above another appliance that could damage it (for example, above a cooker that might emit steam or grease) or in a room, which has a lot of dust in the atmosphere which is corrosive.

Saunier Duval

4 Safety instructions and regulations

This appliance is tested and certificated for safety and performance. It is, therefore, important that no alteration is made to the appliance, without permission, in writing, from Saunier Duval.
Any alteration not approved by Saunier Duval, could invalidate the certification, appliance warranty and may also infringe the current issue of the statutory requirements.

4.1 Safety instructions

If the gas pressure at the inlet of the appliance is outside the range specified, you shall not start the appliance. If the cause of the problem cannot be found nor solved, please contact the Gas Utility company.

Warning! Incorrect installation can cause electric shock or appliance damage.

- When making the connections, locate the sealing washers properly so as to avoid any gas or water leakage.
- Never use a wire brush or stiff-bristle scrubbing brush to clean the heat exchanger as this could damage the appliance.
- Under no circumstances must the User interfere with or adjust sealed parts.

Under Section 6 of The Health and Safety at Work Act 1974, we are required to provide information on substances hazardous to health.
The adhesives and sealants used in this appliance are cured and give no known hazard in this state.

In the event of the appliance overheating the safety devices will cause a safety shutdown. If this happens, call your installation/servicing company.

Warning! This appliance must be earthed. This appliance must be wired in accordance with these instructions. Any fault arising from incorrect wiring cannot be put right under the terms of the Saunier Duval guarantee.

The following safety instructions must be imperatively followed during the maintenance and the replacement of spare parts.

- Stop the appliance (see chapter “Turn the boiler off” of the Instructions for use).
- Disconnect the appliance from the mains power supply with the socket or the double-pole switch (with a minimum gap of 3mm for both poles).
- Turn off the gas control valve.
- Close the shut off valves located on the connection sockets.
- Drain the appliance if you want to change hydraulic parts of the appliance.
- Let the appliance cool down before undertaking any maintenance work.
- Protect all the electrical components from water when you carry out any work.
- Use only new O-rings and gaskets.
- After having completed work on gas components, check their tightness.
- When the replacement work is completed, perform an operation test of the replaced parts and the appliance.

4.2 Regulations

When installing and commissioning the appliance, the regulations below shall be observed in their current version:

In your own interests and that of safety, it is the Law that ALL gas appliances must be installed by a competent person only, in accordance with the current issue of the above regulations.

In GB the installation of the appliance must be carried out by a competent person as described in the following regulations:

- The manufacturer's instructions supplied.
- The Gas Safety (Installation and Use) Regulations.
- The appropriate Buildings Regulations either The Building Regulations, The Building Regulations (Scotland), The Building Regulations (Northern Ireland).
- The Water Fittings Regulations or Water byelaws in Scotland.
- The Health and Safety at Work Act, Control of Substances Hazardous to Health (COSHH).
- The Current I.E.E. Wiring Regulations.

Where no specific instructions are given, reference should be made to the relevant British Standard Code of Practice.
In IE, the installation must be carried out by a competent person and installed in accordance with the current edition of I.S.813 «Domestic Gas Installations», the current Building Regulations and reference should be made to the current ETCI rules for Electrical Installation.

In GB the following Codes of Practice apply: BS4814, BS6798, BS5440 Part 1 and 2, BS5546 Part 1, BS5449, BS6891, BS6700, BS7074 Part 1 and 2, BS7593, BS7671.

In IE: I.S.813, BS5546, BS 5449, BS 7074, BS 7593.

Where no British Standard exists, materials and equipment should be fit for their purpose and of suitable quality and workmanship. The installation of this appliance must be carried out by a competent person in accordance the rules in force in the countries of destination. Manufacturer's instructions must not be taken as overriding statutory requirements.

If the appliance is to be installed in a timber frame building it should be fitted in accordance with the Institute of Gas Engineers document IGE/UP/7/1998. If in doubt seek advice from the local gas undertaking or Saunier Duval.

The installation is subject to building regulation approval, notify the Local Authority of intention to install.

5 Appliance installation

All the dimensions in this chapter are expressed in mm.

5.1 Recommendations before mounting

5.1.1 Domestic hot water circuit design

The circuit should be designed to avoid any unnecessary flow losses (decrease the number of elbows).

The boiler will operate with a minimum supply pressure but with a low flow. Optimum performance will be achieved with a pressure of 1 bar.

5.1.2 Heating circuit design

ISOTWIN CONDENS boilers can be used for any kind of installation: serial or derivated double tube, single tube, hot floor, etc...
Heating surfaces can be made up with heaters, convectors or unit heaters.

Warning: If the materials used are of a different type, some corrosion can occur. In that case, we advise you to add an inhibitor to the heating circuit water (according to the manufacturer's recommendations) that could avoid gas production and oxide formation.

The pipework sections should be fixed by using the following flow/pressure curve (see chapter "Heating circuit adjustment"). The system will be calculated according to the flow corresponding to the power that is really required without taking into account the maximum power that the boiler can supply. Nevertheless, we advise you to have a flow big enough so that the temperature difference between outgoing and return is under or equal to 20°C. The minimum flow rate is indicated in the chapter "Technical Data" at the end of this instruction manual.

The piping route should be designed in such a way that it avoids any air locks and make purging of gas from the system easier. Bleeders should be placed at each high point of the system as well as on any radiators.

Total water volume accepted by the heating circuit depends, amongst other things, on the cold static load. The expansion tank fitted in the boiler is delivered factory set (see chapter "Technical Data" at the end of this instruction manual). At commissioning, it is possible to change this pressure in case of a larger static load. We advise you to provide a drain valve at the lowest point of the system.

If thermostatic radiator valves are used, we advised you not to fit in a room where a room thermostat is fitted.

- In case of an old installation, flush the heating system before installing the new boiler.
- If the boiler is not immediately installed, protect all the pipe fittings so as to avoid that any plaster or paint that could impede the connection.

5.1.3 Tundish discharge

The internal safety valves, 24 and 36 have been tee'd together and the discharge pipe run so that it exits at the right hand bottom of the boiler (see chapter «Block diagram»). The tundish (supplied) must be used with this outlet within the normal guidelines and code of practice and must be installed so that it is visible to the occupants and positioned away from any electrical devices.

It is necessary, during installation, to connect a 22 mm diameter metal discharge pipe to a suitable position outside the building. It is permissible to use copper pipe.

Warning! The discharge pipe from the tundish should terminate in a safe place where there is no risk to persons in the vicinity of the discharge, be of metal and:

- Be at least one pipe size larger than the nominal outlet size of the safety device unless its total equivalent hydraulic resistance exceeds that of a straight pipe 9m long i.e. discharge pipes between 9m and 18m equivalent resistance length should be at least larger than the nominal outlet size of the safety device, between 18m and 27m at least 3 sizes larger, and so on. Bends must be taken in to account in calculating the flow resistance.
- Have a vertical section of pipe at least 300mm long, below the tundish before any elbows or bends in the pipework.
- Be installed with a continuous fall.
- Be positioned away from any electrical appliances.
- Have discharges visible at both the tundish and the final point of discharge but where this is not possible or practically difficult there should be clear visibility at one or these of these locations. Examples of acceptance discharge arrangements are:

- Ideally below a fixed grating and above the waterseal in a trapped gully.
- Downward discharges at a low level; i.e. up to 100mm above external surfaces such as car parks, hard standing, grassed areas etc. are acceptable providing that where children may play or otherwise come in to contact with discharges, a wire cage or similar guard is positioned to prevent contact, whilst maintaining visibility.
- Discharges at high level; e.g into metal hopper and metal down pipe with the end of the discharge pipe clearly visible (tundish visible or not) or into a roof capable of withstanding high temperature discharges of water and 3m from any plastics guttering systems that would collect such discharges (tundish visible).
- Where a single pipe serves a number of discharges, such as in blocks of flats, the number served should be limited to not more than 6 systems so that any installation can be traced reasonably easily. The single common discharge pipe should be least one pipe size larger then the largest individual discharge pipe to be connected. If unvented hot water storage systems are installed where discharges from safety devices may not be apparent i.e. in dwellings occupied by blind, infirm or disabled people, consideration should be given to the installation of an electronically operated device to warn when discharge takes place.

Note: the discharge will consist of scalding water and steam. Asphalt, roofing felt and non-metallic rainwater goods may be damaged by such discharges.

5.1.4 Water treatment

In the case of an existing installation, it is Essential that prior to installing the new boiler the system is thoroughly flushed.
For optimum performance after installation of a new system, the boiler and its associated central heating system should also be flushed.
Flushing should be carried out in accordance with BS7593: 1992 using a cleanser such as Sentinel X300 or X400, Fernox Superfloc or Salamander corrosion guard cleaner.

For long-term corrosion protection, after flushing, an inhibitor suitable for stainless steel heat exchangers should be used, refer to the current issue of BS 5449 and BS 7593 on the use of inhibitors in central heating systems. Examples are Sentinel X100 Fernox or Salamander corrosion guard inhibitor.

5.2 Dimensions

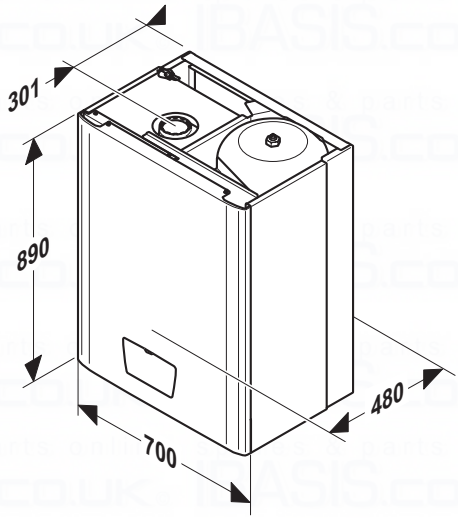

5.3 List of delivered equipment

The boiler is delivered in two packages:

- The boiler and the hanging bracket.
- One documentation pack:
  - 1 user and installation manual
  - 1 guarantee envelope
  - 1 Wiring diagram
  - 1 gasket pack

  One parts pack:
  - 1 connection pack 1
  - 1 connection pack 2 + wall template
  - 1 safety valves drain pack

The flue is supplied separately and will depend upon the configuration of the installation.

5.4 Fixing to the wall

- Make sure the material you use fits those of the appliance.
- Chose the location of the appliance. See chapter “Appliance location”.

- Remove front panel, unscrew and remove the two retaining screws from the bottom of the front panel. Remove front panel by lifting up and forward.
- To remove the self adhesive wiring diagram label from the document envelope, fit the self adhesive wiring diagram label to the inside of the front panel, put front panel in a safe place to avoid damaging it.
- The hanging bracket will be adapted to the features of the bearing wall and will have to take into account the weight of the boiler filled with water.
- Drill the holes for the fixing screws in accordance to the diagram below and to the size of the wall template delivered with the appliance.

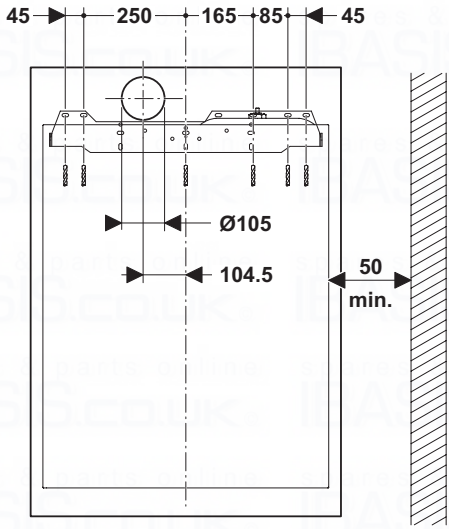

- Screws mechanical features will match, at least, the values indicated on the following sketch.

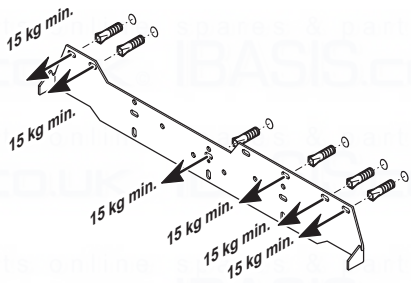

- Place the boiler above the hanging bracket.
- Slowly lower the boiler.
- Set the seals on the different pipe fittings.
- Make connections to boiler, gas, water and heating cocks with the tube assemblies supplied in piping pack.
- Do not forget to connect the filling loop extension on the filling tap.

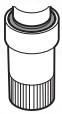

Saunier Duval

5.5 Gas and water connection

- Before undertaking any operation, carefully clean the pipes with an appropriate product in order to remove impurities such as filings, welds, different oils and greases that may be present. These foreign bodies may enter the boiler and disrupt the operation.
- Do not use any solvents that could damage the heating circuit.
- Take care when soldering pipes as the heat could damage the seals and cause leakage. Fit washers after joints have cooled.

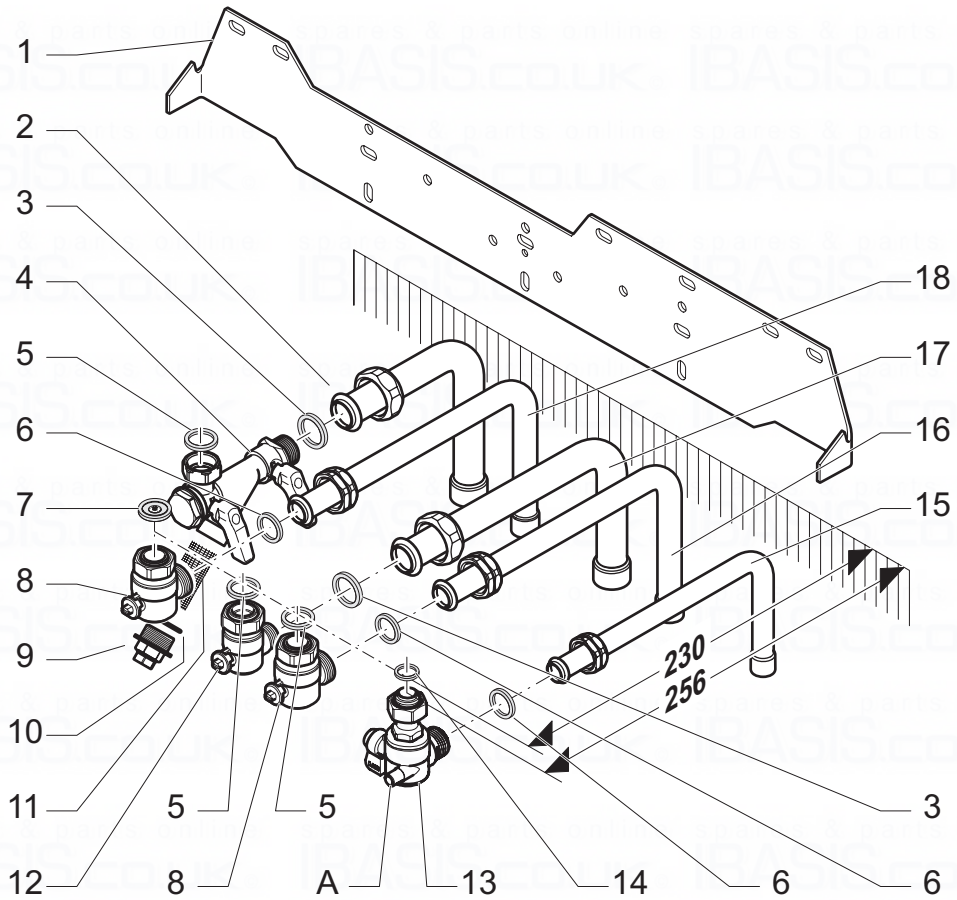

Legend

Connection pack 1 :

A Pressure test point
1 Hanging bracket
2 Heating return pipe: angular bush to weld Ø 22 + nut 3/4"
5 Gasket 3/4" (x3)
8 Cold water inlet + domestic hot water outlet with isolating valve
12 Heating flow with isolating valve
13 Gas service cock
14 Gasket 1/2" (x3)
15 Gas pipe: angular bush to weld Ø 15 + nut 1/2"
16 Cold water inlet pipe + domestic hot water pipe: angular bush to weld Ø 15 + nut 1/2"
17 Heating flow pipe: angular bush to weld Ø 22 + nut 3/4"

Connection pack 2 :

4 Heating return with isolating valve
9 Nut / Pressure gauge connection
10 Gasket
11 Heating return filter

Gasket pack :

3 Cold water flow rate limiter
6 Gasket (x2)
7 Gasket (x3)

The heating return adapter is fitted with a filter (11) that could be reached by unscrewing the end nut. This operation must be achieved once the heating return shut-off taps are closed.

The test pressure will be read on a pressure gauge (9) (not supplied) screwed in the position of the first nut of the heating return adapter.

- Only use the genuine seals delivered with the appliance.
- Check that there is no leakage. Repair if need be.

The pipes from the heating and domestic hot water safety discharge valves must not discharge above an entrance, window or any type of public access area.

Take the short safety discharge tube, union nut and seal, supplied loose in the boiler fittings pack.
This must be extended, using not less than 15mm o.d. pipe, to discharge, in a visible position, outside the building, facing downwards, preferably over a drain.

The pipe must have a continuous fall and be routed to a position so that any discharge of water, possibly boiling, or steam cannot create any danger to persons, damage to property or external electrical components and wiring.

To ease future servicing it is advisable to use a compression type fitting to extend the safety discharge valve tube.

Warning! Cylinder relief valve connections should not be used for any other purpose.

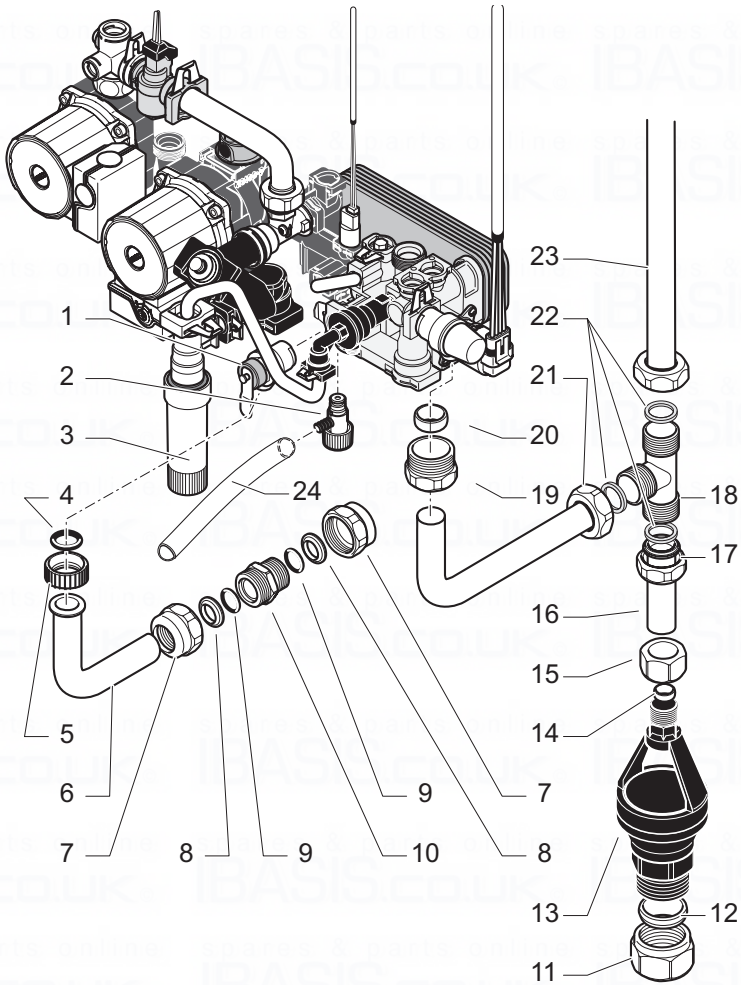

Legend

1	Domestic hot water safety valve
2	Drain cock
3	Filling loop extension knob
4	Gasket
5	Nut
6	Discharge valve for PRV (BLUE) on domestic hot water circuit
7	Nut (x2)
8	Gasket (x2)
9	Gasket (x2)
10	Union coupling
11	Nut
12	Biconical ring
13	Tundish
14	Biconical ring
15	Nut
16	Nozzle
17	Nut
18	Inner tee
19	Biconical ring coupling
20	Biconical ring
21	Discharge pipe for PRV (RED) on heating circuit
22	Gasket
23	Nozzle
24	Tube for drain valve

Valve outlet size	Minimum size of discharge to tundish D1	Minimum size of discharge pipe D2 from tundish	Maximum resistance allowed expressed as a length of straight pipe i.e. no elbows or bends	Resistance created by each elbow or bend
G 1/2”	15 mm	22 mm 28 mm 35 mm	up to 9 m	0.8 m 1.0 m 1.4 m
G 3/4”	22 mm	28 mm 35 mm 42 mm	up to 18 m	1.0 m 1.4 m 1.7 m
G 1”	28 mm	35 mm 42 mm 54 mm	up to 27 m	1.4 m 1.7 m 2.3 m

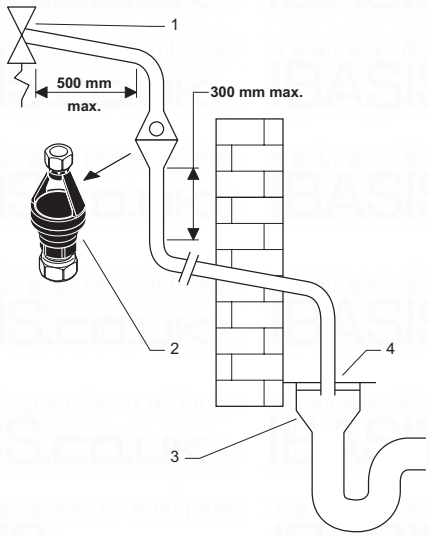

Legend
1 Safety device eg. temperature relief valve
2 Tundish (supplied)
3 Trapped gully
4 Fixed grating

Discharge pipe D1: from temperature relief valve to tundish.
Discharge pipe D2: from tundish with continuous fall.

- See table above for size examples.

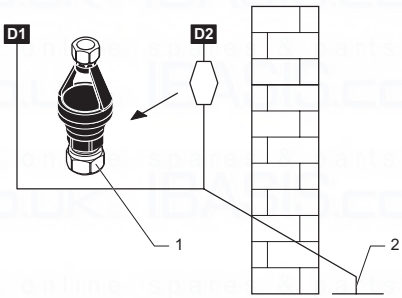

Legend
1 Tundish (supplied)
2 Gully
D1 Discharge pipe
D2 Discharge pipe

Discharge pipe D1: from heating safety valve on jig.
Discharge pipe D2: from domestic hot water safety valve.

5.6 Connection to the condensate trap

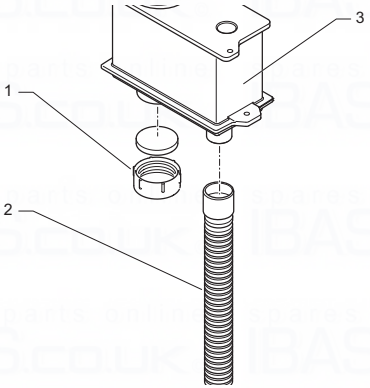

Legend

1 Acces plugs for cleaning purposes
2 Condensate drain connection
3 Condensate trap

- Connect the flexible pipe to a discharge system leading to the sewer in compliance with the instructions below:
- Use the condensate drain flexible connection pipe supplied (2).
- Ensure there is a conbinual fall of 2.5° (44 mm/m).
- Do not let the condensate drain flexible connection fall into the trap.
- Do not use copper pipes.

Important notice:
The float of the condensate trap also ensures fume tightness. Therefore, it is not necessary to add water in the condensate trap.

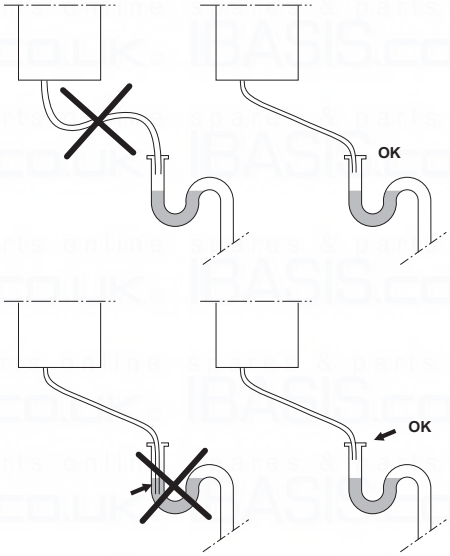

5.7 Flue connection

Different flue outlet configurations can be carried out.

- Consult your supplier for more information about the other possibilities and associated accessories.

Warning! You can only use flue accessories approved for the ISOTWIN CONDENS.

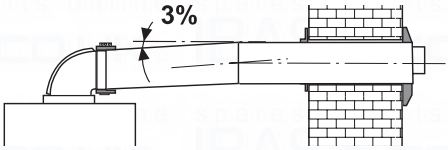

Saunier Duval's horizontal flue automatically provides a 3° angle that enables the return of the condensates to the appliance.

- Whatever the kind of flue system chosen, observe the minimum distances indicated in the chart below to position the flue terminals.

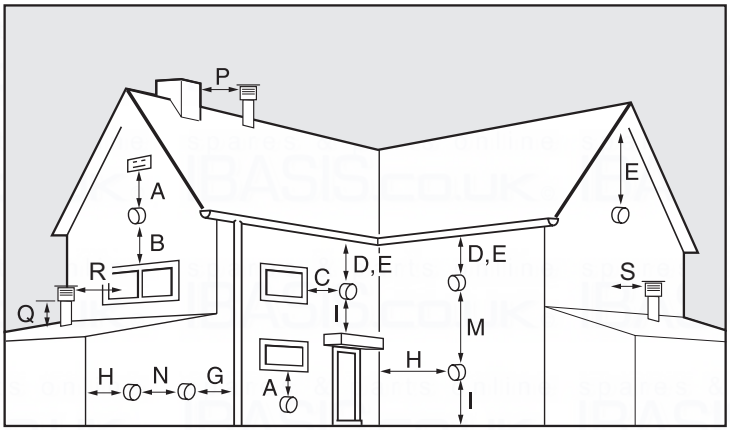

UNDER CAR PORT etc.

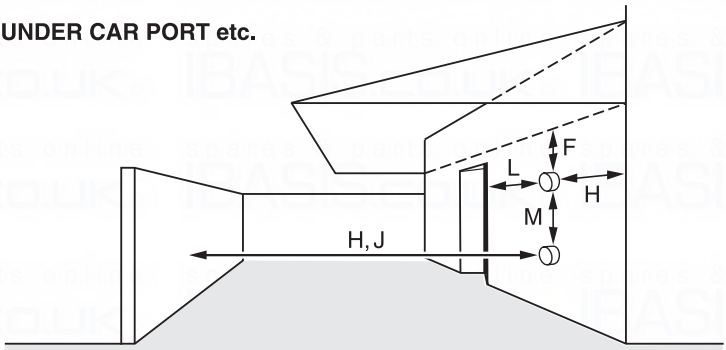

Position	Position of the flue terminal	mm
Horizontal flues		
A	directly below an opening, air brick, opening windows	300
B	above an opening, air brick, opening windows	300
C	horizontally to an opening, air brick, opening windows	300
D	below gutter, drain/soil pipe	25
E	below eaves	25
F	below a balcony or car port	25
G	from vertical drain pipes and soil pipes	25
H	from internal/external corners	25

H*	to a boundary alongside the terminal	300
I	above adjacent ground or balcony level	300
J	from surface or a boundary facing the terminal	600
K	facing terminals	1200
L	from opening (door/ window) in car port into dwelling	1200
M	vertical from a terminal	1500
N	horizontally from a terminal	300
Vertical flues		
P	from another terminal	600
Q	above roof level	300
R	from adjacent opening window	1000
S	from adjacent wall to flue	300

H*: This dimension comply with the building regulations, but it may need to be increased to avoid wall staining and nusance from pluming depending on site conditions.

5.7.1 Horizontal concentric flue Ø 60/100 (C13 type installation)

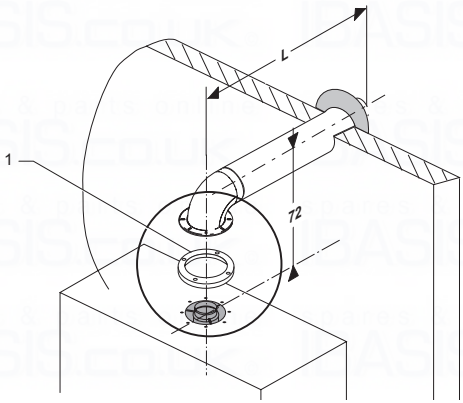

Legend
1 Gasket

Maximum flue index: 150 Pa

This value is reached with the length of the maximum duct (L) + 1 90° elbow.

Flue model	Max. length
Ø 60/100	5 m

A Plume mangement kit can be installed at the extremity of the duct.

- Refer to the instructions sheet of the accessory and take it into account the following length:
  - L1 ≤ 6 m whatever L
  - L2 = L = 5 m

Every time a 90° elbow is used (or 2 off 45°), the length (L) should be reduced by 1 m.

5.7.2 Vertical concentric flue Ø 60/100 (C33 type installation)

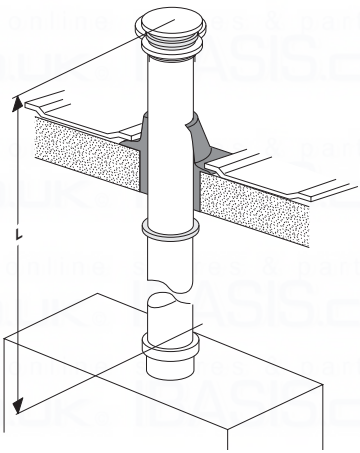

Maximum flue index: 150 Pa

This value is reached with the length of the maximum duct (L) + 1 90° elbow.

Flue model	Max. length
Ø 60/100	5.5 m

Every time an extra 90° elbow is used (or 2 off 45°), the length (L) should be reduced at by 1 m.

5.7.3 Twin flue 2 x Ø 80 (C53 type installation)

Warning!

- Any duct that goes through a wall and whose temperature is over 60°C from the room temperature will be thermally insulated at this passage. The insulation will be composed of an appropriate insulating material whose thickness is ≥ 10 mm and thermal conductibility λ ≤ 0.04 W/m.K.

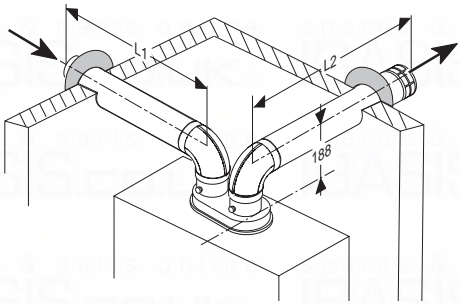

The mains cable integrated in the boiler is specific: if you want to change it, order it exclusively from Saunier Duval service.

Maximum flue index: 150 Pa

This value is reached with 2 elbows, the separator and the maximum duct length (L1+L2) of 40 m.

Every time an extra 90° elbow is used (or 2 off 45°), the length (L) should be reduced by 1 m.

5.8 Electrical connection

Warning! Incorrect installation can cause electric shock or appliance damage.

- Connect the power cable of the boiler to the 230 V single-phase + earth network.
- Observe the live and neutral connection on the boiler.

Important: A skilled professional should achieve the electric connection of the appliance. All the interventions achieved inside the appliance will be made by the After Sales Service or a skilled professional.

Isolation should be by a double pole switched fused spur box, with a minimum gap of 3mm for both poles.

The fuse of the PCB must be connected to the neutral.

5.9 Wiring diagram

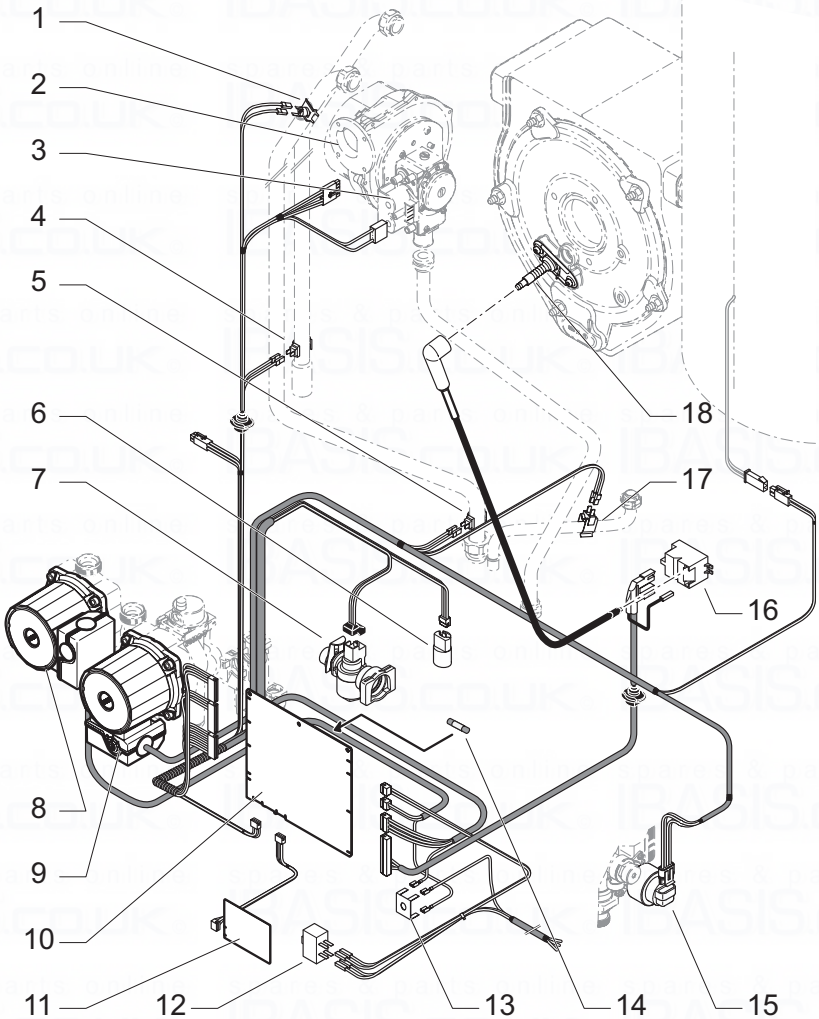

Legend

1	Overheat thermostat	10	Main board
2	Fan	11	User interface
3	Gas valve	12	Main reset switch
4	Heating return thermistor	13	Chassis earth
5	Heating flow thermistor	14	Fuse
6	Water pressure sensor	15	Three way valve
7	Water flow sensor	16	Ignition module
8	DHW pump	17	DHW temperature sensor
9	Heating pump	18	Ignition and controle electrode

spares & parts online
IBASIS.CO.UK

6 Commissioning

- Slide the switch until the “I” symbol appears.
  The operating indicator on the control panel turns on: the boiler is ready to operate.
- Open the isolating valves located on the pipes: they will be placed in the direction of the flow.
- Open the auto air vent on the pump as well as the automatic bleeders of the system.
- Open the blue filling loop valve situated under the boiler until you obtain a 2 bars pressure on the indicator.
- Bleed each radiator to remove the air, re-tighten bleed screws.
- Leave the cap on the pump auto air vent open.
- Flush the domestic hot water system by openning the hot water taps for several minutes.
- Make sure the display indicates a system pressure of between 1 and 2 bars. Re-fill system as necessary.

7 Specific adjustments

7.1 Heating circuit adjustment

This flow rate will be adjusted according to the system calculations.
When it is delivered, the (1) integrated bypass screw is open by half a turn.

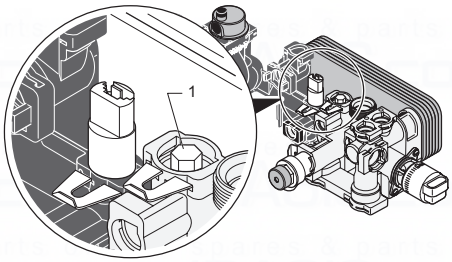

Legend
1 Bypass screw

- Depending on the requirements, adjust this screw (for example, screw for closing) in order to fit the available pressure head to the system energy loss according to the output/pressure curve.

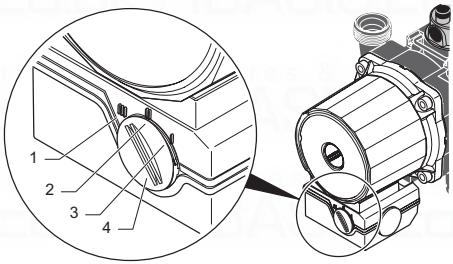

Legend
1 Speed III
2 Speed II
3 Speed I
4 Speed selector of pump

- Turn the selector (4) to choose pump speed I, II or III in relation to the output/ pressure curve.

Output/pressure curve

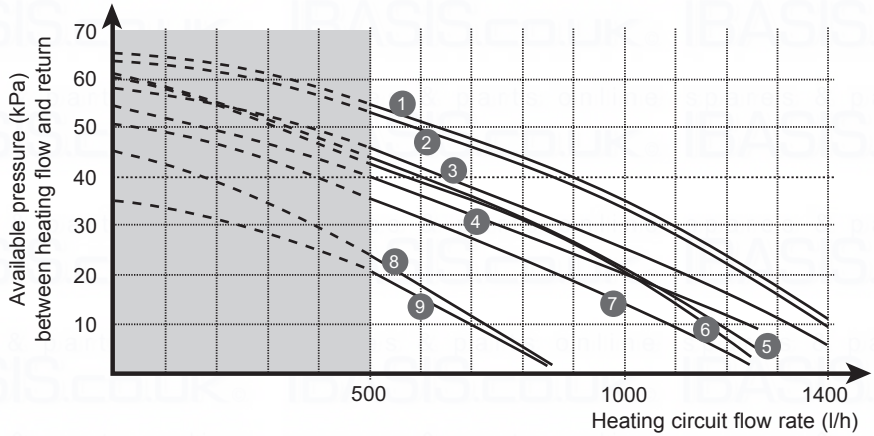

Legend

Speed III
1 By-pass fully shut
2 Open 1/4 turn
3 Open 1/2 turn
4 Open 2 turns

Speed II
5 By-pass fully shut
6 Open 1/4 turn
7 Open 1/2 turn

Speed I
8 By-pass fully shut
9 Open 1/2 turn

7.2 Access to the boilers technical data (for professional and After Sales Service use only)

The access to the boilers technical data allows you to make some adjustments and to analyse potential malfunctions.

For example, you can adjust the maximum power of the boiler in heating mode on all the values included between the powers indicated in the chart at the end of this manual. This makes it possible to adapt the power supplied to the real needs of the system so as to avoid any over-power, while maintaining a high efficiency.
Note: the heating power decrease has no effect on the domestic hot water power.

Do as follows:

- Press for more than 10 seconds on the “MODE” key to access the setting menu.
- When “0” and “” appear, use the keys + or - until “96” appears on the indicator.
- Once again press the “MODE” key to display the first parameters menu, i.e. the heating maximum power (menu COD.1).
- When the COD menu.1 displays on the indicator, press the “MODE” key if you want to alter this parameter.
- Press the + - keys to set the required value.
- Validate by pressing the “MOD” key.
- Press the + key to go to the following menu.

Note: the indicator goes back to its normal position after 10 minutes without any operation or after having pressed the “MODE” key for more than 10 s.

N° menu	Title	Action
COD. 1	maximum heating power	Press the + - keys to set the required value (factory setting: 20)
COD. 2	flue configuration	No adjustment required for this kind of boiler. Flue codes have no effect on the boiler operation.
COD. 3	minimum heating temperature	Select a value: 22°C, 28°C, 38°C or 50°C (factory setting: 22°C)
COD. 4	maximum heating temperature	Select a value: 50°C, 65°C, 73°C or 80°C (factory setting: 73°C)
COD. 5	pump mode	Select an operating mode: 1 - intermittent with room thermostat (factory setting) 2 - intermittent with burner 3 - permanent
The two following menus require an outdoor sensor:		
COD. 6	outdoor sensor: regulation slope	Among the 16 slopes numbered from 0 to 15, select one regulation slope (see following sketch). Example: if you select the slope n°10 (factory setting), the heating temperature will be set at its maximum for an outdoor temperature of -5.5°C.

COD. 7	outdoor thermostat : regulation slope reference point	Move the reference point of the regulation slopes by moving the parameter from -9 to 10.
COD. 8	burner forcing	Select an operating mode: 0 - normal operation. 1 - forcing at P. mini. 2 - forcing at P. maxi. 3 - forcing at P. ignition
COD 8 menus and following would only be used by After Sales Service Engineers.		

Temperature setting curves.

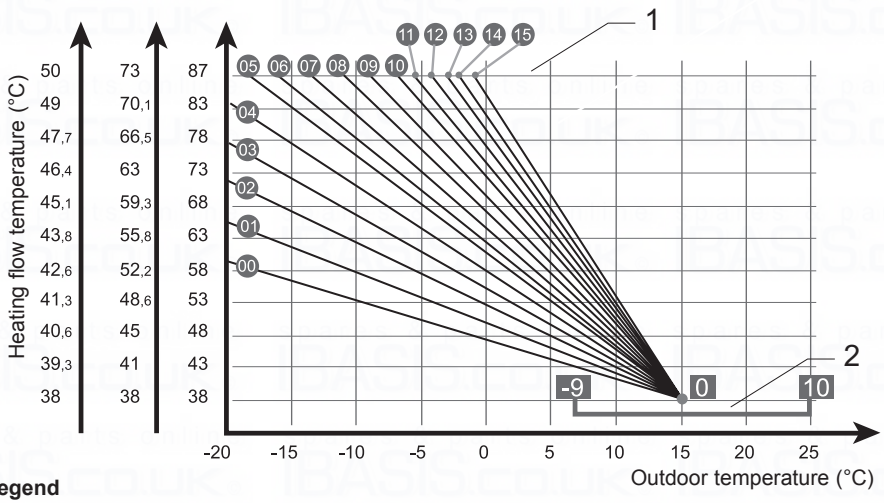

Legend

1 Menu 6 setting

2 Menu 7 setting

Saunier Duval

8 Draining of the appliance

8.1 Heating circuit

- Turn on the drain cock (1) provided at the system low point.
- Provide an air intake by opening a radiator bleed screw.

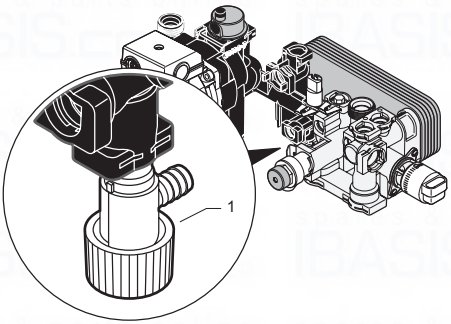

- In order to drain only the water in the boiler, first shut off the heating flow and return isolating valves.

8.2 Domestic Hot Water circuit

- Turn off the water cock of the system.
- Install a drain hose and unscrew the bleed valve located under the storage vessel.

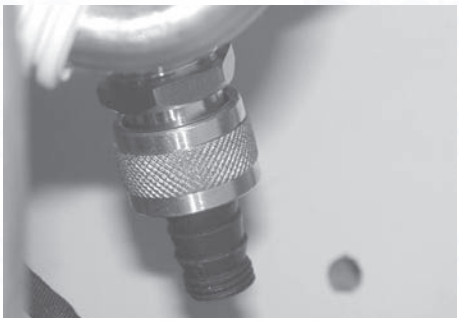

- Create an air intake by turning on a hot water tap.

9 Gas conversion

The ISOTWIN CONDENS can be converted to run on LPG-Propane (G31). This conversion should only be carried out by a competent person.

- During the conversion to Propane, use of a suitable flue gas analyser is necessary.

As an option, a chargeable boiler only commissioning service can be provided by Saunier Duval Service by calling telephone number located at the begining of the manual (customer service).

Tools required to make the conversion are a 2 mm Allen key and an electricians screwdriver.

- Ensure that the appliance supply pressure = 37 mbar.

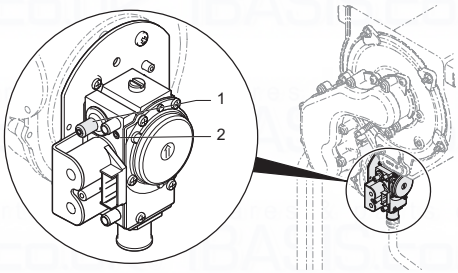

Legend
1 Adjustment screw min. power
2 Adjustment screw max. power

9.1 Maximum rate

- Remove the front panel and the inner panel
- Turn screw 2 fully colckwise.
- Turn screw 2 back anti-clockwise by 5.5 turns.
- Ensure that the gas analyser is set to the correct fuel setting - Propane.

- Attach combustion analyser to the combustion test point.
- Turn on the mains electrical supply and turn on the gas service clock. Switch the boiler on.
- Fully open a hot water tap.
- Wait for 2 minutes or so, until the CO2 reading has stabilized.
- Adjust the screw (2) to obtain the CO2 value stated in the following table using the following principal:
  - To increase the CO2 value, turn the screw anti-clockwise.
  - To decrease the CO2 value, turn the screw clockwise.

Note: After re-fitting the inner front case, the CO2 values must correspond to that given in the following table.

9.2 Minimum rate

- Remove the front panel and the inner panel
- Ensure that the gas analyser is set to the correct fuel setting - Propane.
- Attach combustion analyser to the combustion test point.
- Turn on the mains electrical supply and turn on the gas service cock. Switch the boiler on.
- Adjust the heating output to minimum using menu 1 described in the chapter ‘‘Access to the boilers technical data’’.
- Wait for 2 minutes or so, until the CO2 reading has stabilized.
- Adjust the screw (1) to obtain the CO2 value stated in the following table using the following principal:
  - To increase the CO2 value, turn the screw clockwise.
  - To decrease the CO2 value, turn the screw anti-clockwise.

Note: After re-fitting the inner front case, the CO2 values must correspond to that given in the following table.

Gas changing adjustment	Unit	G20	G31
Heating output max. hot water	kW	34.2	
Heating output min. heating	kW	8	
CO2 case on	%	9 +/- 0.2	10.1 +/- 0.2
CO2 case off	%	9.2 +/- 0.3	10.3 +/- 0.3

9.3 Reactivation

- After setting and reassembly, restore the maximum heating power to its initial value (20 kW).
- Stick the gas data label close to the nameplate.

10 Fault finding

You will find the list of some fault codes in the operating instructions.
The faults described in this chapter should be carried out by a skilled professional and if need be by SAUNIER DUVAL's After Sales Service.

Important: a central heating system cannot operate efficiently if it is not filled with water and if the air it contains at first has not been completely removed. If those requirements are not fulfilled, some noise originated by the water boiling inside the boiler and noise of water chute inside the radiators could appear.

Code	Description	Possible cause
F1, F4	Ignition fault, boiler fialed to light	No gas / Insufficient gas Incorrect gas valve adjustment Electrode ignition lead defect Electronic igniter defective Check air inlet duct Check connections to igniter unit
F5	Overheat fault	Overheat stat operated Maximum temperature exceeded Check thermistor connections Air in system with thermistor at maximum setting Faulty overheat stat connection
F6	Central heating flow thermistor fault	Thermistor cable defective/broken Thermistor faulty Check that thermistor attached correctly to pipe
F7	DHW thermistor fault	
F8	Tank thermistor fault	
F9	Water pressure sensor fault	Faulty sensor connection Check wiring
F10	Central heating return thermistor fault	Thermistor cable defective/broken, thermistor faulty Check that thermistor attached correctly to pipe
F11	User interface connection fault	Check wiring between mainboard and user interface
F12	Main board connection fault	
F13	Main board connection fault	Check connection and wires
F14	Central heating flow T° > 95°C	System fault / Possible pump failure Check thermistor on flow
F16	Flame detection fault (flame presence for more than 5 seconds after burner stopped)	Gas valve defective
F17	Power supply is less than 170V	Check electrical supply / polarity
F18	User interface fault	Faulty user interface
F19	Central heating thermistor unplugged	Thermistor cable defective/broken, thermistor faulty Check that thermistor attached correctly to pipe
F20	Software incompatibility	Incorrect user interface or main board Incorrect product code
F23	Water circulation fault	Possible pump failure
F26	Maximum delta temperature	Water circulation fault Check central heating flow and return connection

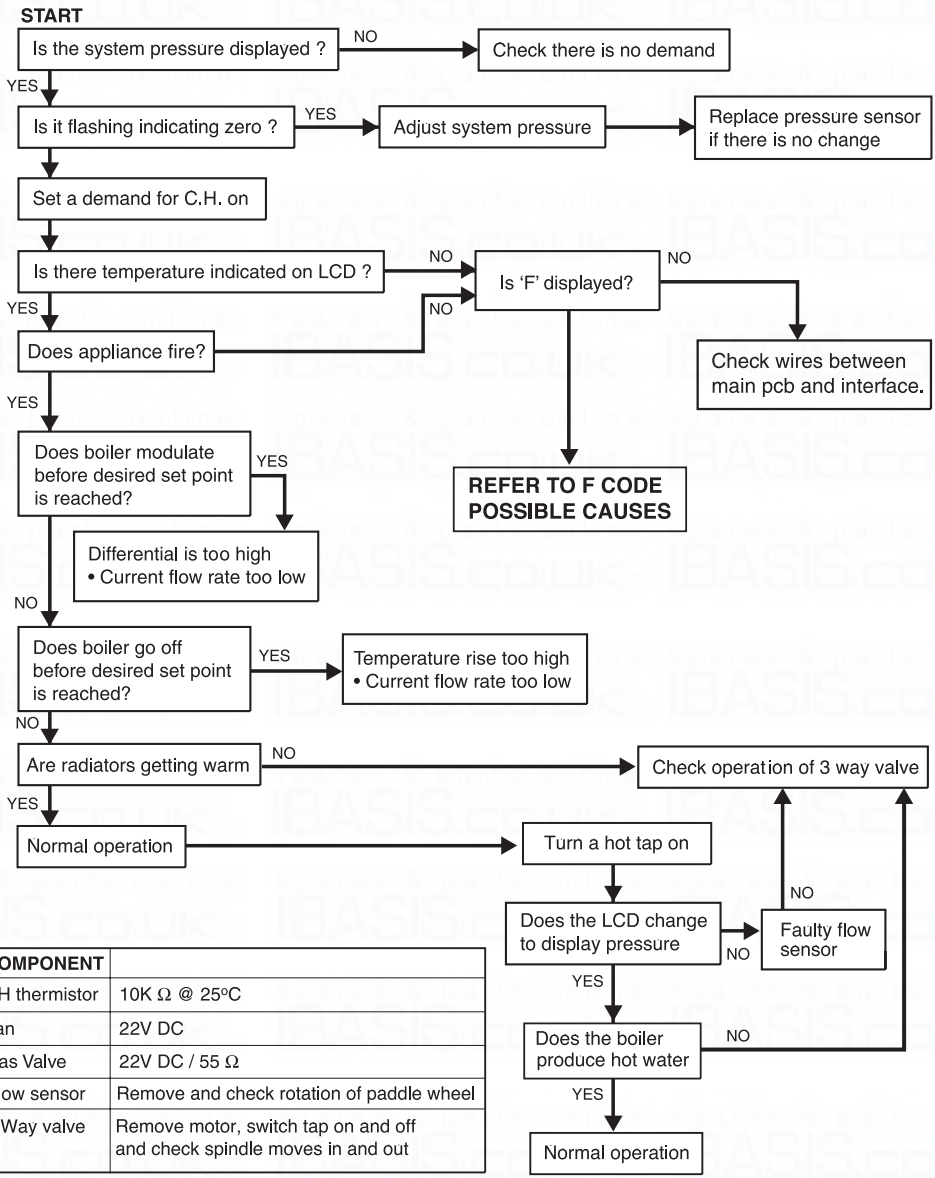

COMPONENT	
CH thermistor	10K Ω @ 25°C
Fan	22V DC
Gas Valve	22V DC / 55 Ω
Flow sensor	Remove and check rotation of paddle wheel
3 Way valve	Remove motor, switch tap on and off and check spindle moves in and out

Installation and servicing instructions strictly reserved for qualified gas installers

Saunier Duval

11 Control / Commissioning

Once the appliance is installed, check whether it runs:

- Start the appliance according to the indications of the operating instructions and check whether it runs.
- Check the appliance for leaks (gas and water) and eliminate any leakage found.
- Check that the ignition is correct and that the flames of the burner are uniform.
- Check that the flue exhausts properly.
- Check the whole control and safety devices, their setting and their operating state.

12 User information

The user should know how to use the appliance.

- Explain to the user the appliance operating principles and demonstrate if required.
- Have a look at the operating instructions together and answer any questions if need be.
- Give the user all of the manuals and documents concerning the appliance and tell the user to keep them near the appliance.
- Explain more precisely the safety principles they should observe.
- Remind the user to regularly service the appliance.

13 Spare parts

In order to guarantee a long-lasting operating of the parts of the appliance and keep it in good condition, only original spare parts from SAUNIER DUVAL should be used when repairing and servicing the appliance.

- Only use original spare parts.
- Make sure that these parts have been correctly assembled with regards to their position and basic sense.

14 Maintenance

Warning!

- Before starting the maintenance of the appliance, read carefully the chapter “Safety instructions”.

14.1 Casing

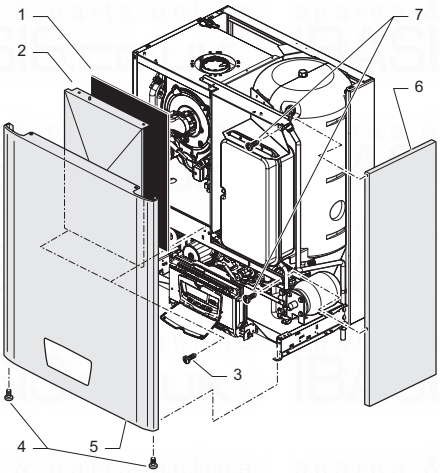

Legend

1 Inner front panel insulation
2 Inner front panel
3 Inner front panel retaining screws
4 Front panel retaining screws
5 Front panel
6 Right side panel
7 Right side panel retaining screws

14.1.1 Front panel

- Remove the 2 front panel retaining screws (4).
- Remove the front panel (5).

14.1.2 Right side panel

- Remove the front panel (5).
- Remove the right side panel retaining screws (7).
- Remove the right side panel (6).

14.1.3 Inner front panel

- Remove the inner front panel retaining screws (3).
- Remove the inner front panel (2).

Saunier Duval

14.2 Hydraulic block

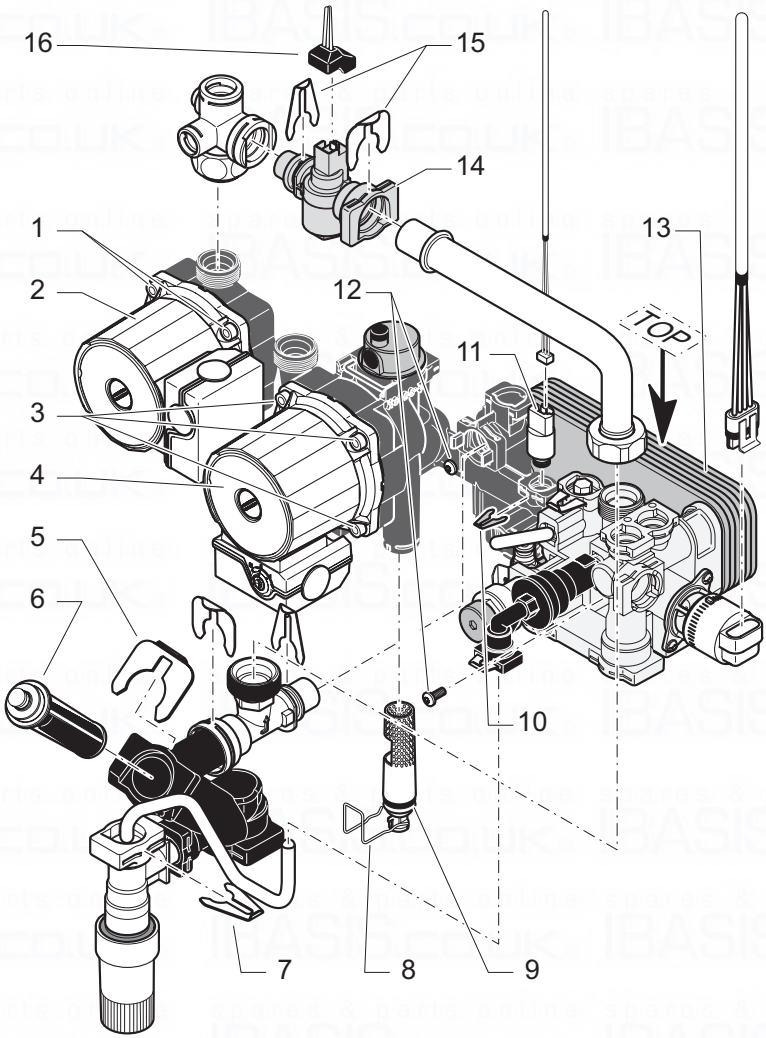

Legend

1 DHW pump retaining screws
2 DHW pump motor
3 Heating pump retaining screws
4 Heating pump motor
5 Cold water filter retaining clip
6 Cold water filter
7 Filling tap retaining clip
8 “Foaming” filter retaining clip
9 “Foaming” filter
10 Low water pressure sensor retaining clip
11 Low water pressure sensor
12 Sanitary exchanger retaining screws
13 Sanitary exchanger
14 Flow sensor
15 Flow sensor retaining clips
16 Connector

14.2.1 Cold water filter

- Turn off the cold water main inlet.
- Relieve the filter retaining clip (5).
- Remove the cold water filter (6) and clean it.

14.2.2 “Foaming” filter

The “foaming” filter improves the heating circuit gas purging operation.

- Turn off the heating flow and return insulating valves, and then drain the boiler.
- Relieve the filter retaining clip (8) located under the pump.
- Relieve the “Foaming” filter (9).
- Clean and put back in place, and then correctly position the lock pin.

14.3 Heating Return Filter

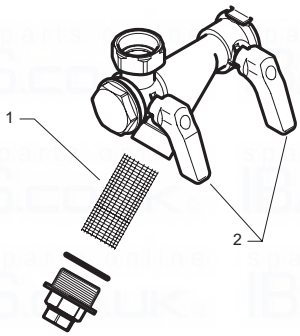

Legend
1 Heating Return Filter
2 Isolating valves

- Close both shut off isolating valves (2) located on the heating return.
- Loosen the pipe fitting end, then relieve the heating return filter (1) and clean it.

14.4 Condensate trap

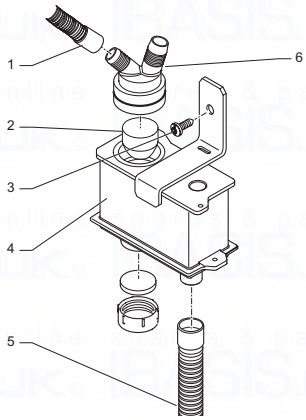

Legend
1 Flexible
2 Float
3 Condensate trap retaining screw
4 Condensate trap
5 Draining flexible
6 Siphon adapter

- Disconnect the connector flexible (5) located under the condensate trap.
- Remove the inner front panel.
- Loosen both retaining screw (3) of the condensate trap (4).
- Remove the condensates recovery equipment by loosening flexibles (1); take care do not spray liquid.
- Clean flexibles and remove potential wastes.
- Clean the float (2) located inside the condensate trap.
- Rinse the condensate trap to clean it.
- Reassemble the unit taking care to correctly place the seals.

Warning: do not connect the condensate trap to copper pipe.

Saunier Duval

14.5 Combustion block

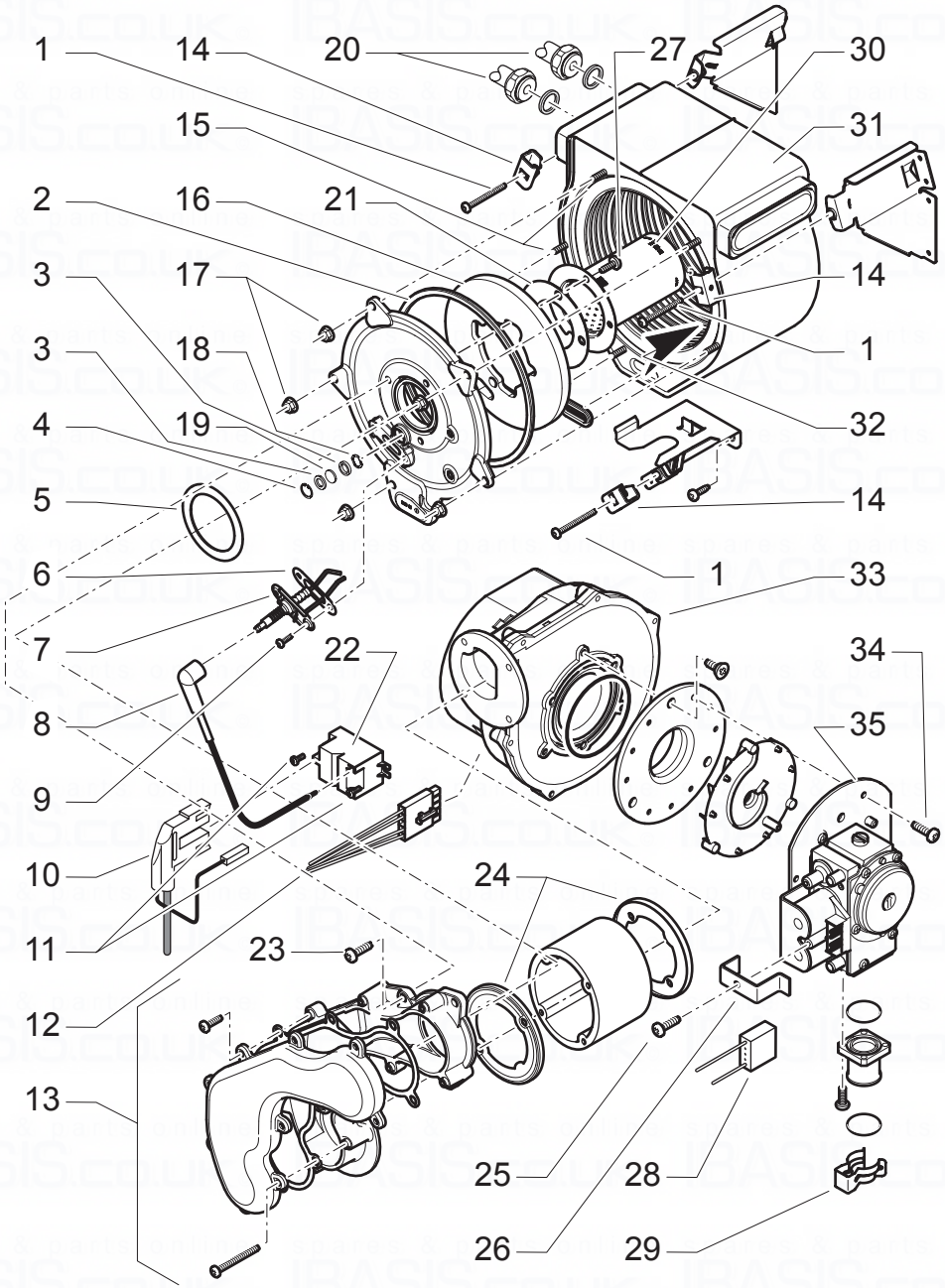

Legend

1 Heat exchanger retaining screws
2 Gasket
3 Viewing window gasket
4 Viewing window circlip
5 Gasket
6 Ignition and controle electrode gasket
7 Ignition and controle electrode
8 Ignition and controle electrode connector
9 Ignition and controle electrode retaining screws
10 Ignition module harness connector
11 Ignition module retaining screws
12 Fan connector
13 Mixing arm
14 Heat exchanger hanging brackets
15 Burner assembly retaining screws
16 Insulation
17 Heat exchanger retaining nuts
18 Spring leaf
19 Viewing window
20 Heat exchanger hydraulic coupling
21 Gasket
22 Ignition module
23 Mixing arm retaining screws
24 Gasket
25 Gas valve connector retaining screw
26 Gas valve connector retaining plate
27 Burner retaining screws
28 Gas valve connector
29 Gas valve retaining clip
30 Burner
31 Heat exchanger
32 Combustion chamber
33 Fan
34 Fan retaining screws
35 Gas valve

14.5.1 Ignition and controle electrode

- Remove the ignition and controle electrode connector (8).
- Remove the 2 ignition and controle electrode retaining screws (9).
- Remove the ignition and controle electrode (7).
- Clean both ends of the electrode with a dry cloth if necessary.
- Inspect the tips for damage.
- Clean away any debris and check the spark gap is 3.5 to 4.5 mm.
- Check the electrode gasket for signs of damage and replace if necessary.

14.5.2 Burner

- Disconnect the gas supply at the gas service cock.
- Remove the two gas pipe retaining clips (29), one located below gas valve (35) and the other one located on the underside of the boiler chassis.
- Pull sealing grommet down gas pipe.
- Push the gas pipe upwards further into gas valve connection and then rotate anti-clockwise until the gas pipe end is over the large hole in boiler chassis. Withdraw the gas pipe from gas valve connection and remove.
- Note : When replacing ensure that the sealing grommet, situated below the gas valve is correctly re-seated.
- Disconnect the gas valve connector (28).
- Disconnect the fan connector (12).
- Remove the five heat exchanger retaining nuts (17).
- Gently remove the fan (33), gas valve (35) and burner assembly from the heat exchanger (31).
- Clean the burner with a soft brush taking great care not to damage the front insulation.
- Do not use wire or sharp instruments to clean the holes of the burner.

- Inspect the burner for any signs of damage.
- Inspect the sealing rings and replace if necessary.
- Removal of the burner is not necessary during a normal service.

14.5.3 Heat exchanger

- Remove the 2 mixing arm retaining screws (23) bolted on the fan (33).
- Remove the 5 heat exchanger retaining nuts (17).
- Remove the “burner + mixing arm” unit from the heat exchanger.
- Remove loose debris from combustion chamber using a soft brush and vacuum cleaner. Carefully flush by spraying water removing any remaining debris through the condensate trap (Ensure the water is kept away from electrical components).

14.5.4 Combustion Check.

- If a gas carrying component has been replaced, the combustion of the appliance should be checked.
- Once the appliance has been re-assembled (apart from the front and inner casing panels) connect a CO2 combustion analyser to the test point on the flue adapter (see chapter «Gas conversion»).

15 Remplacement of parts

Warning!

- Before starting the remplacement of parts, read carefully the chapter “Safety instructions”.

spares & parts online IBASIS.CO.UK

15.1 Hydraulic block

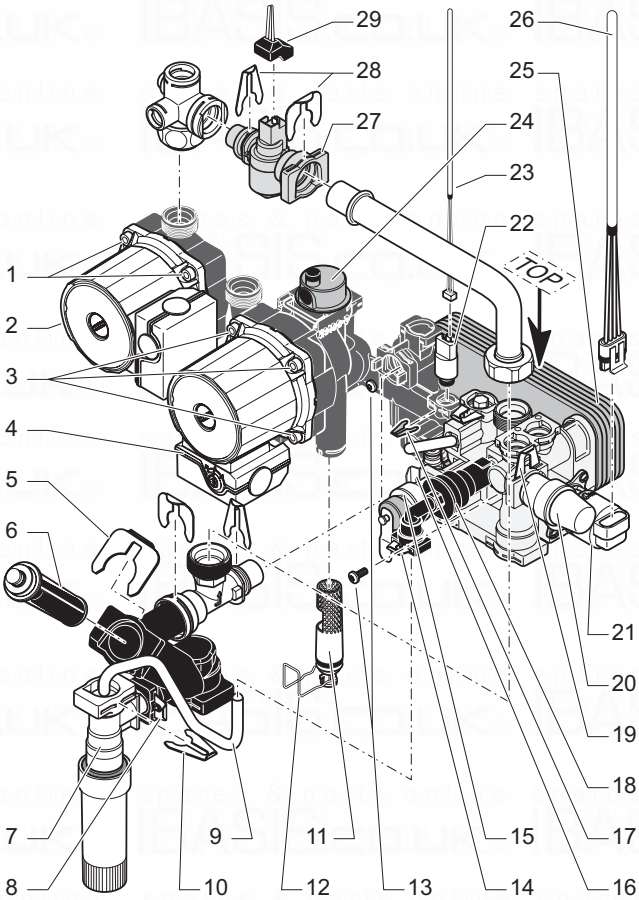

Legend

1	DHW pump retaining screws	16	Heating safety valve retaining clip
2	DHW pump motor	17	Low water pressure sensor retaining clip
3	Heating pump retaining screws	18	Filling device
4	Heating pump motor	19	DHW safety valve retaining clip
5	Cold water filter retaining clip	20	DHW safety valve
6	Cold water filter	21	Three way valve
7	Filling tap	22	Low water pressure sensor
8	Filling tap retaining clip	23	Low water pressure sensor connector
9	Filling device nozzle	24	Automatic air vent
10	Filling tap retaining clip	25	DHW exchanger
11	“Foaming” filter	26	Three way valve connector
12	“Foaming” filter retaining clip	27	Flow sensor
13	DHW exchanger retaining screws	28	Flow sensor retaining clips
14	Filling device nozzle retaining clip	29	Flow sensor connector
15	Heating safety valve		

15.1.1 DHW pump or heating

- Loosen the 4 pump retaining screws (1)/(3).
- Remove the pump motor (2)/(4).

15.1.2 DHW exchanger

- Remove both retaining screws (13) accessible from the boiler front face.

Be careful with the direction of reassembly : the word “TOP”, printed on the edge of the exchanger (25) will be set upward.

15.1.3 Flow sensor

- Turn off the cold water inlet.
- Relieve the clips (28).
- Remove the connector (29).
- Remove the flow sensor (27).

15.1.4 Cold water filter

- Relieve the filter retaining clip (5).
- Remove the cold water filter (6).

15.1.5 “Foaming” filter

The “foaming” filter improves the heating circuit gas purging operation.

- Turn off the heating flow and return insulating valves, and then drain the boiler.
- Relieve the filter retaining clip (12) located under the pump.
- Relieve the “Foaming” filter (11).

15.1.6 Low water pressure sensor

- Relieve the clip (17).
- Remove the connector (23).
- Remove the low water pressure sensor (22).

15.1.7 Three way valve

- Remove the connector (26).
- Remove the three way valve (21).

15.1.8 DHW safety valve or heating

- Relieve the clips (16)/(19).
- Remove the safety valve (15)/(20).

15.1.9 Filling device

- Disconnect the drain connection (5) located under the filling device (18).
- Relieve the clip (14).
- Remove the filling device (18).

15.1.10 Automatic air vent

- Remove the retaining clip and remove the automatic air vent (24).
- Fit the new automatic air vent and ‘O’ ring ensuring the vent cap is left loose.
- Refill, vent and pressurise the boiler.
- Check for leaks.

15.1.11 Filling tap

- Remove the clips (8)/(10).
- Fit new ‘O’ rings.
- After replacing the filling tap, open the cold water isolation valve and slowly open a hot water tap to remove air. Close the hot water tap and check for any leaks.

15.2 Combustion block

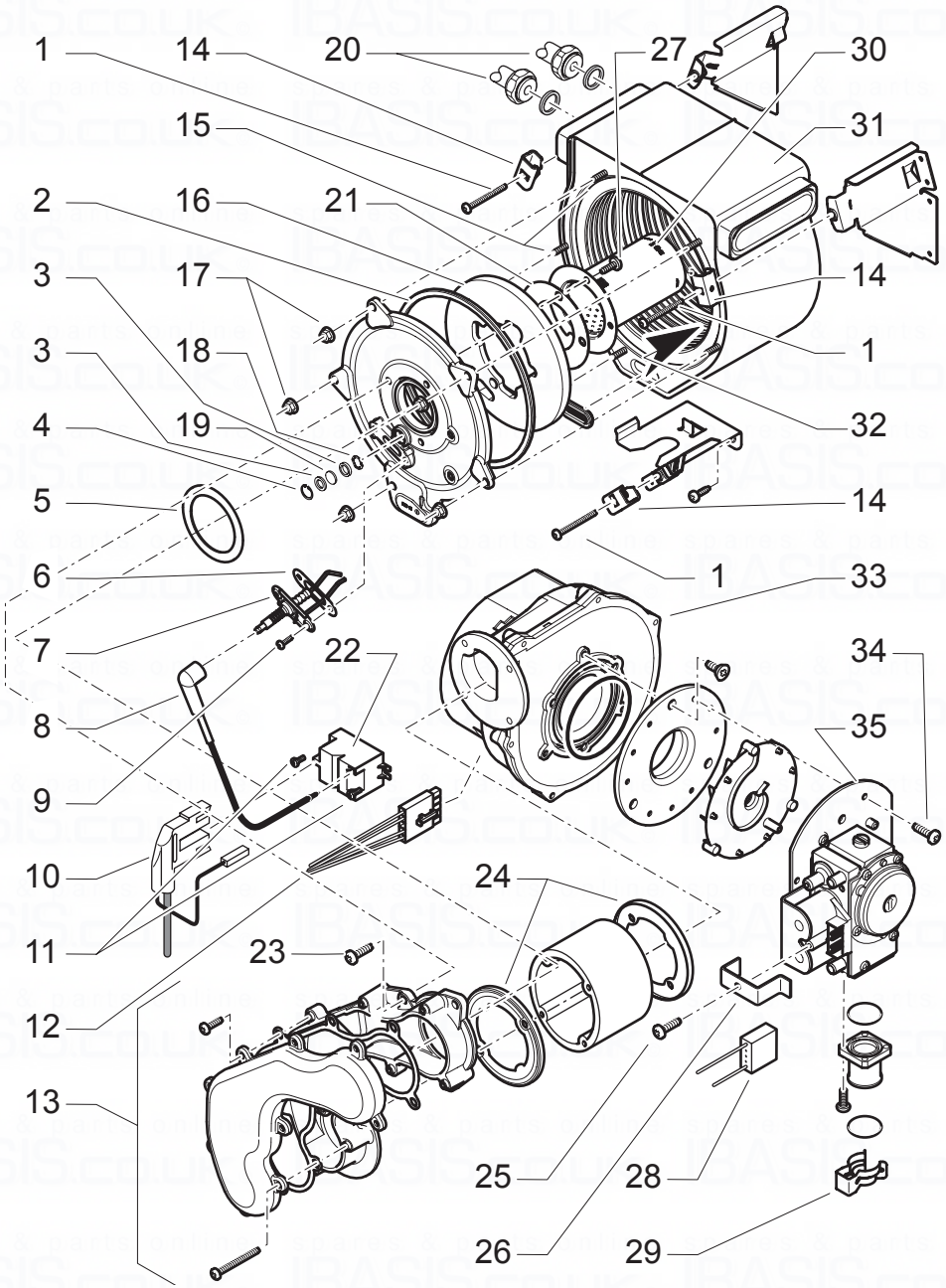

Legend

1 Heat exchanger retaining screws
2 Gasket
3 Viewing window gasket
4 Viewing window circlip
5 Gasket
6 Ignition and controle electrode gasket
7 Ignition and controle electrode
8 Ignition and controle electrode connector
9 Ignition and controle electrode retaining screws
10 Ignition module harness connector
11 Ignition module retaining screws
12 Fan connector
13 Mixing arm
14 Heat exchanger hanging brackets
15 Burner assembly retaining screws
16 Insulation
17 Heat exchanger retaining nuts
18 Spring leaf
19 Viewing window
20 Heat exchanger hydraulic coupling
21 Gasket
22 Ignition module
23 Mixing arm retaining screws
24 Gasket
25 Gas valve connector retaining screw
26 Gas valve connector retaining plate
27 Burner retaining screws
28 Gas valve connector
29 Gas valve retaining clip
30 Burner
31 Heat exchanger
32 Combustion chamber
33 Fan
34 Fan retaining screws
35 Gas valve

15.2.1 Mixing arm

- Remove the 2 mixing arm retaining screws (23) bolted on the fan (33) and the burner door.
- Remove the mixing arm (13).
- Fit the new mixing arm and the new gaskets in the reverse order.

15.2.2 Burner

- Remove the mixing arm (13).
- Remove the 5 heat exchanger retaining nuts (17).
- Remove the burner retaining screws (27) and remove the burner (30).
- Fit the new burner and the new gasket in the reverse order.

15.2.3 Heat exchanger

- Remove the 2 mixing arm retaining screws (23) bolted on the fan (33).
- Remove the 5 heat exchanger retaining nuts (17).
- Remove the “burner + mixing arm” unit of the heat exchanger.
- Remove the heat exchanger retaining screws (1) and relieve the heat exchanger retaining plates (14).
- Relieve the 2 heat exchanger hydraulic coupling (20).

Warning: There will be water in the heat exchanger (31).

- Remove condense pipe connector from bottom of heat exchanger.
- Carefully remove the heat exchanger (31) out.
- Fit the new heat exchanger in the reverse order.

15.2.4 Gas valve

- Relieve the gas valve retaining clip (29).
- Relieve the 4 gas nozzle retaining screws located under the gas valve (35).

- Remove the screw (25) and the retaining plate (26) from the gas valve connector.
- Remove the gas valve connector (28).
- Remove the fan retaining screws (34).
- Remove the gas valve (35).
- Fit the new gas valve and the new gasket in the reverse order.
- When re-fitting the gas valve take care as it can be fitted more than one way.
- After re-fitting check the combustion CO2 and adjust if necessary (see chapter «Gas conversion»).

15.2.5 Fan

- Remove the mixing arm (13).
- Remove the fan retaining screws (34).
- Relieve the fan connector (12).
- Relieve the fan (33).
- Fit the new fan and the new gasket in the reverse order.

15.2.6 Ignition module

- Remove the ignition and control electrode connector (8) from the ignition module (22).
- Remove the ignition module harness connector (10).
- Remove the 2 ignition module retaining screws (11).
- Fit the new ignition module in the reverse order.

15.2.7 Ignition and controle electrode

- Remove the connector from the ignition and control electrode connector (8).
- Remove the 2 ignition and controle electrode retaining screws (11).
- Fit the new ignition and controle electrode and the new gasket in the reverse order.

15.2.8 Viewing window

- Remove the circlip (4).
- Remove the gaskets (3) (18), the viewing window (19) and the spring leaf (18).
- Fit the new viewing window and the new gaskets in the reverse order.

15.3 DHW storage vessel / Expansion vessel

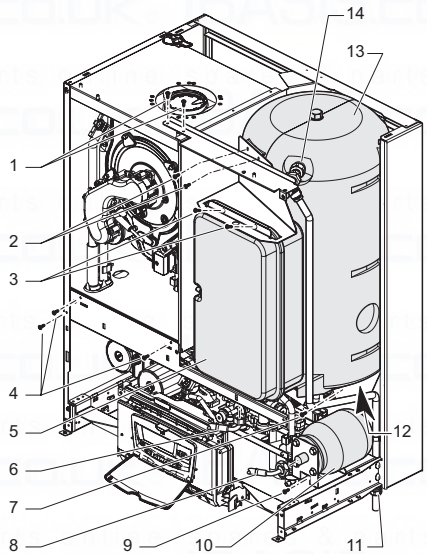

Legend

1 Hanging bracket retaining screws
2 DHW storage vessel retaining screws
3 Heating expansion vessel retaining screws
4 Tie-rod retaining screws
5 Heating expansion vessel
6 Heating expansion vessel coupling
7 DHW storage vessel retaining screws
8 DHW expansion vessel coupling

9 DHW expansion vessel retaining screw
10 DHW expansion vessel
11 Drain nozzle nut
12 DHW storage vessel coupling
13 DHW storage vessel
14 DHW storage vessel coupling

15.3.1 Heating expansion vessel

- Relieve the heating expansion vessel coupling (6).
- Loosen the screws (2) and (3) of the hanging bracket and remove it.
- Remove the heating expansion vessel (5).
- Fit the new heating expansion vessel and the new gasket in reverse order.

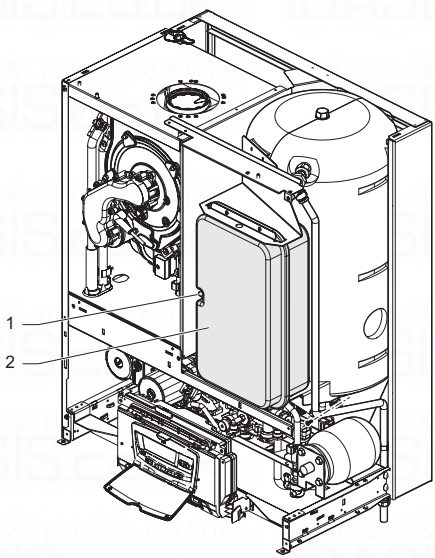

Legend
1 Pressure test point
2 Heating expansion vessel

- Check the supply pressure of the expansion vessel (see chapter “Technical Data”) with the pressure tap (1) and adjust it if necessary.
- Refill, vent and pressurise the boiler.
- Check for leaks.

15.3.2 DHW expansion vessel

- Relieve the DHW expansion vessel coupling (8).
- Relieve the DHW expansion vessel retaining screw (9).
- Remove the DHW expansion vessel (10).
- Fit the new DHW expansion vessel and the new gasket in the reverse order.
- Refill, vent and pressurise the boiler.
- Check for leaks.

15.3.3 DHW storage vessel

- Remove the heating expansion vessel (5).
- Relieve the DHW storage vessel coupling (12) (14) the drain nozzle nut (11).
- Remove the screws (1) (4) and (7), and take off the tie-rod.
- Relieve the DHW storage vessel harness.
- Relieve the DHW storage vessel (6).
- Fit the new DHW storage vessel and the new gasket in the reverse order.
- Refill, vent and pressurise the boiler.
- Check for leaks.

Saunier Duval

15.4 Condensate trap

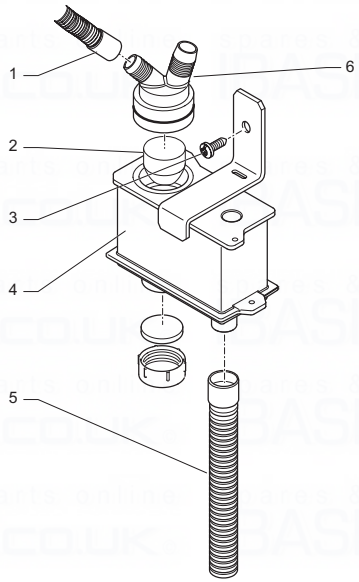

Legend

1 **Flexibles**
2 **Float**
3 **Condensate trap retaining screw**
4 **Condensate trap**
5 **Draining flexible**
6 **Siphon adapter**

- Disconnect the connector flexible (5) located under the condensate trap.
- Remove the front face of the tight chamber.
- Loosen both retaining screw (3) of the condensate trap (4).
- Remove the condensates recovery equipment by loosening flexibles (1); take care do not spray liquid.

Warning: condensate is acidic: use protective gloves.

- Fit the new condenstae trap in the reverse order.

15.5 Control panel

15.5.1 Access to the printed circuit board

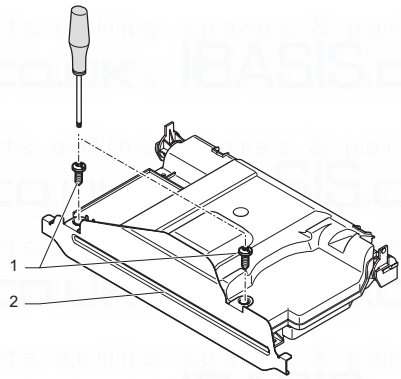

Legend

1 **Switchbox protective cover retaining screw**
2 **Cover retaining plate on the switchbox**

- Remove the 2 switchbox protective cover retaining screws (1).
- Remove the cover retaining plate on the switchbox (2).
- Remove the switchbox protective cover.

15.5.2 Main board

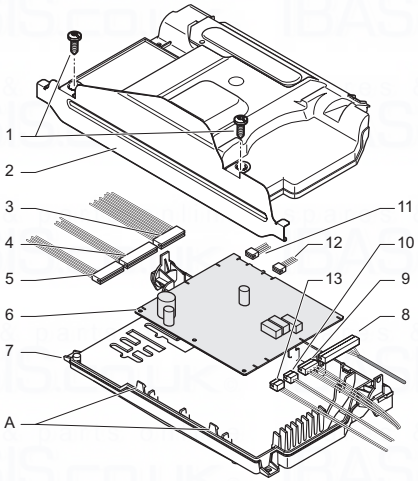

Legend

1	**Switchbox protective cover retaining screw**
2	**Cover retaining plate on the switchbox**
3	**Low voltage harness connector**
4	**Low voltage harness connector**
5	**Low voltage harness connector**
6	**Main board**
7	**Switchbox**
8	**Ignition module harness connector**
9	**Heating pump harness connector**
10	**DHW pump harness connector**
11	**Low voltage harness connector**
12	**Main board harness connector**
13	**On/Off switch harness connector**
A	**Main board retaining clips**

- Remove the 2 switchbox protective cover retaining screws (1).
- Remove the cover retaining plate on the switchbox (2).
- Remove the switchbox protective cover.
- Disconnect the connectors (3) (4) (5) (8) (9) (10) (11) (12) (13) from the main board.
- Remove the main board (6) from the switchbox (7) clips (A).
- Fit the new main board in the reverse order.

15.5.3 User interface board

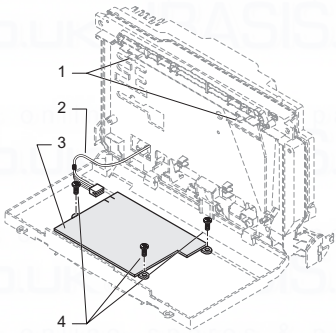

Legend

1	**User interface board retaining clips**
2	**Main board harness connector**
3	**User interface board**
4	**User interface board retaining screws**

- Push on the 2 retaining clips (1) of the user interface to make it tip over.
- Remove the main board harness connector (2).
- Remove the user interface board retaining screws (4).
- Remove the user interface board (3).
- Fit the new user interface board in the reverse order.

Saunier Duval

16 Technical data

Boiler type C13, C33, C53

Description	Unit	ISOTWIN CONDENS F 35 E
Gas category		II_{2H3P}
Heating		
Heating output at 80°C/60°C (P)	kW	7.6 - 28
Efficiency calculated on net calorific value at 80/60°C	%	95.8 - 97.8
Heating output at 50°C/30°C (P)	kW	8.6 - 30.6
Efficiency calculated on net calorific value at 50/30°C	%	107
Minimum calorific flow rate (Q min)	kW	8
Maximum calorific flow rate (Q max)	kW	28.6
Heating minimum flow rate	l/h	500
Maximum heating temperature	C°	80
Minimum heating temperature	C°	22
Expansion vessel, useful capacity	l	12
Expansion tank initial pressure	bar	0.75
Maximum system capacity at 75°C	l	240
Safety valve, maximum service pressure (PMS)	bar	3
Domestic hot water		
Heating output (P)	kW	7.6 - 33.2
Minimum calorific flow rate (Q min)	kW	8
Maximum calorific flow rate (Q max)	kW	34.2
Minimum hot water temperature	°C	38
Maximum hot water temperature	°C	63
Specific flow rate (D) (ΔT 30°C)	l/min	21
Threshold flow rate	l/min	0
DHW storage vessel	l	42
DHW storage vessel heat up time	min	6
Time to reheat 70% of the storage to 60°C	min	4
Maximum supply pressure	bar	16
Temp./pressure relief valve operating pressure	bar	7
Temp./pressure relief valve operating temperature	°C	90
Cold water flow rate regulator	l/min	16
Safety valve, maximum service pressure	bar	10
Minimum operating pressure	bar	0.7
Maximum operating pressure	bar	10

Combustion		
Fresh air flow rate (1013 mbar - 0°C)	m3/h	43
Product outlet flow rate	g/s	15.3
Product outlet temperature	°C	68
Values of product outlet (measured on nominal heating output with G20 reference gas):		
CO	ppm	86
	mg/kWh	92
CO2	%	9.2
NOx balance	ppm	21.1
	mg/kWh	37.3
Dimensions:		
Height	mm	890
Width	mm	700
Depth	mm	480
Net weight	kg	75
Weight of appliance when full	kg	120
Supply voltage	V/Hz	230/50
Maximum absorbed power	W	241
Electrical rating	A	1.05
Fuse	mA	630
Electric protection		IPX4D
Class		1
CE number		1312 BP 4108

Technical data depending on the gas type	Unit	ISOTWIN CONDENS F 35 E
Natural gas G 20 (1)		
Sanitary flow rate at maximum input	m^3/h	3.62
Heating flow rate at maximum input	m^3/h	3.02
Flow rate at minimum input	m^3/h	0.68
Inlet pressure	mbar	20
Burner injector diameter	mm	5.65

(1) 15 °C, 1013,25 mbar

Saunier Duval

BENCHMARK No. | | | | | | |

GAS BOILER COMMISSIONING CHECKLIST

BOILER SERIAL No. _____ **NOTIFICATION No.** _____

CONTROLS *To comply with the Building Regulations, each section must have a tick in one or other of the boxes*

TIME & TEMPERATURE CONTROL TO HEATING	ROOM T/STAT & PROGRAMMER/TIMER	☐	PROGRAMMABLE ROOMSTAT	☐
TIME & TEMPERATURE CONTROL TO HOT WATER	CYLINDER T/STAT & PROGRAMMER/TIMER	☐	COMBI BOILER	☐
HEATING ZONE VALVES	FITTED	☐	NOT REQUIRED	☐
HOT WATER ZONE VALVES	FITTED	☐	NOT REQUIRED	☐
THERMOSTATIC RADIATOR VALVES	FITTED	☐		
AUTOMATIC BYPASS TO SYSTEM	FITTED	☐	NOT REQUIRED	☐

FOR ALL BOILERS CONFIRM THE FOLLOWING

THE SYSTEM HAS BEEN FLUSHED IN ACCORDANCE WITH THE BOILER MANUFACTURER'S INSTRUCTIONS? ☐

THE SYSTEM CLEANER USED

THE INHIBITOR USED

FOR THE CENTRAL HEATING MODE, MEASURE & RECORD

GAS RATE	☐	m^3/hr	☐	ft^3/hr
BURNER OPERATING PRESSURE (IF APPLICABLE)	☐	N/A	☐	mbar
CENTRAL HEATING FLOW TEMPERATURE			☐	°C
CENTRAL HEATING RETURN TEMPERATURE			☐	°C

FOR COMBINATION BOILERS ONLY

HAS A WATER SCALE REDUCER BEEN FITTED? YES ☐ NO ☐

WHAT TYPE OF SCALE REDUCER HAS BEEN FITTED?

FOR THE DOMESTIC HOT WATER MODE, MEASURE & RECORD

GAS RATE	☐	m^3/hr	☐	ft^3/hr
MAXIMUM BURNER OPERATING PRESSURE (IF APPLICABLE)	☐	N/A	☐	mbar
COLD WATER INLET TEMPERATURE			☐	°C
HOT WATER OUTLET TEMPERATURE			☐	°C
WATER FLOW RATE			☐	lts/min

FOR CONDENSING BOILERS ONLY CONFIRM THE FOLLOWING

THE CONDENSATE DRAIN HAS BEEN INSTALLED IN ACCORDANCE WITH THE MANUFACTURER'S INSTRUCTIONS? YES ☐

FOR ALL INSTALLATIONS CONFIRM THE FOLLOWING

THE HEATING AND HOT WATER SYSTEM COMPLIES WITH CURRENT BUILDING REGULATIONS ☐

THE APPLIANCE AND ASSOCIATED EQUIPMENT HAS BEEN INSTALLED AND COMMISSIONED IN ACCORDANCE WITH THE MANUFACTURER'S INSTRUCTIONS ☐

IF REQUIRED BY THE MANUFACTURER, HAVE YOU RECORDED A CO/CO_2 RATIO READING? N/A ☐ YES ☐ CO/CO_2 RATIO

THE OPERATION OF THE APPLIANCE AND SYSTEM CONTROLS HAVE BEEN DEMONSTRATED TO THE CUSTOMER ☐

THE MANUFACTURER'S LITERATURE HAS BEEN LEFT WITH THE CUSTOMER ☐

COMMISSIONING ENG'S NAME PRINT _____ CORGI ID No. _____

SIGN _____ DATE _____

SERVICE INTERVAL RECORD

It is recommended that your heating system is serviced regularly
and that you complete the appropriate Service Interval Record Below.

Service Provider. Before completing the appropriate Service Interval Record below, please ensure you have carried out the service as described in the boiler manufacturer's instructions. Always use the manufacturer's specified spare part when replacing all controls

SERVICE 1 DATE
ENGINEER NAME
COMPANY NAME
TEL No.
CORGI ID CARD SERIAL No.
COMMENTS
SIGNATURE

SERVICE 2 DATE
ENGINEER NAME
COMPANY NAME
TEL No.
CORGI ID CARD SERIAL No.
COMMENTS
SIGNATURE

SERVICE 3 DATE
ENGINEER NAME
COMPANY NAME
TEL No.
CORGI ID CARD SERIAL No.
COMMENTS
SIGNATURE

SERVICE 4 DATE
ENGINEER NAME
COMPANY NAME
TEL No.
CORGI ID CARD SERIAL No.
COMMENTS
SIGNATURE

SERVICE 5 DATE
ENGINEER NAME
COMPANY NAME
TEL No.
CORGI ID CARD SERIAL No.
COMMENTS
SIGNATURE

SERVICE 6 DATE
ENGINEER NAME
COMPANY NAME
TEL No.
CORGI ID CARD SERIAL No.
COMMENTS
SIGNATURE

SERVICE 7 DATE
ENGINEER NAME
COMPANY NAME
TEL No.
CORGI ID CARD SERIAL No.
COMMENTS
SIGNATURE

SERVICE 8 DATE
ENGINEER NAME
COMPANY NAME
TEL No.
CORGI ID CARD SERIAL No.
COMMENTS
SIGNATURE

SERVICE 9 DATE
ENGINEER NAME
COMPANY NAME
TEL No.
CORGI ID CARD SERIAL No.
COMMENTS
SIGNATURE

SERVICE 10 DATE
ENGINEER NAME
COMPANY NAME
TEL No.
CORGI ID CARD SERIAL No.
COMMENTS
SIGNATURE

spares & parts online
IBASIS.CO.UK

spares & parts online
IBASIS.CO.UK

0020003998-02 - 02/05

Saunier Duval

Saunier Duval, Nottingham Road
Belper,Derbyshire
DE56 1JT
Tel. 00 44 (0)1773 525914
Fax. 00 44 (0)1773 828070
www.saunier-duval.co.uk